aerospace
climate control
electromechanical
filtration
fluid & gas handling
hydraulics
pneumatics
process control
sealing & shielding

Click here to view bookmarks.

(Revised 04-26-2018)

Air Preparation Units

Parker-Watts General Line FRL, Hi-Flow FRL & Desiccant Dryers

Catalog 0730-2

Parker

ENGINEERING YOUR SUCCESS.

Warnings, Offer of Sale

⚠ CAUTION:

Polycarbonate bowls, being transparent and tough, are ideal for use with Filters and Lubricators. They are suitable for use in normal industrial environments, but should not be located in areas where they could be subjected to direct sunlight, an impact blow, nor temperatures outside of the rated range. As with most plastics, some chemicals can cause damage. Polycarbonate bowls should not be exposed to chlorinated hydro-carbons, ketones, esters and certain alcohols. They should not be used in air systems where compressors are lubricated with fire-resistant fluids such as phosphate ester and di-ester types.

Metal bowls are recommended where ambient and/or media conditions are not compatible with polycarbonate bowls. Metal bowls resist the action of most such solvents, but should not be used where strong acids or bases are present or in salt laden atmospheres. Consult the factory for specific recommendations where these conditions exist.

TO CLEAN POLYCARBONATE BOWLS USE MILD SOAP AND WATER ONLY! DO NOT use cleansing agents such as acetone, benzene, carbon tetrachloride, gasoline, toluene, etc., which are damaging to this plastic.

Metal bowl guards are recommended for all applications.

⚠ CAUTION:

REGULATOR PRESSURE ADJUSTMENT – The working range of knob adjustment is designed to permit outlet pressures within their full range. Pressure adjustment beyond this range is also possible because the knob is not a limiting device. This is a common characteristic of most industrial regulators, and limiting devices may be obtained only by special design.

⚠ WARNING

FAILURE OR IMPROPER SELECTION OR IMPROPER USE OF THE PRODUCTS AND/OR SYSTEMS DESCRIBED HEREIN OR RELATED ITEMS CAN CAUSE DEATH, PERSONAL INJURY AND PROPERTY DAMAGE.

This document and other information from Parker Hannifin Corporation, its subsidiaries and authorized distributors provide product and/or system options for further investigation by users having technical expertise. It is important that you analyze all aspects of your application including consequences of any failure, and review the information concerning the product or system in the current product catalog. Due to the variety of operating conditions and applications for these products or systems, the user, through its own analysis and testing, is solely responsible for making the final selection of the products and systems and assuring that all performance, safety and warning requirements of the application are met.

The products described herein, including without limitation, product features, specifications, designs, availability and pricing, are subject to change by Parker Hannifin Corporation and its subsidiaries at any time without notice.

Offer of Sale

The items described in this document are hereby offered for sale by Parker Hannifin Corporation, its subsidiaries or its authorized distributors. This offer and its acceptance are governed by the provisions stated on the separate page of this document entitled “Offer of Sale”.

© Copyright 2005 - 2012, Parker Hannifin Corporation. All Rights Reserved.

Parker Hannifin Corporation
Pneumatic Division
Richland, Michigan
www.wattsfluidair.com

Table of Contents

General Information - Particulate & Coalescing Filters....2-3

Particulate Filters
- Minature Particulate Filters....4-7
- Compact Particulate Filters....8-9
- Standard Particulate Filters....10-11
- Hi-Flow Particulate Filters....12-19

Coalescing Filters
- Miniature Coalescing Filters....20-23
- Compact Coalescing Filters....24-25
- Standard Coalescing Filters....26-27
- Hi-Flow Coalescing Filters....28-31

Bulk Liquid Separators....32-35

Desiccant Dryers....36-37

General Information - Regulators....38-39

Regulators
- Miniature Regulators....40-49
- Economy Regulators....50-51
- Compact Regulators....52-53
- Standard Regulators....54-57
- Hi-Flow Regulators....58-61
- Pilot Operated Regulators....62-67

General Information - Filter / Regulators....68-69

Filter / Regulators
- Miniature Filter / Regulators....70-75
- Compact Filter / Regulators....76-77
- Standard Filter / Regulators....78-79

General Information - Lubricators....80-81

Lubricators
- Miniature Mist Lubricators....82-85
- Compact Micro-Mist Lubricators....86-87
- Standard Micro-Mist Lubricators....88-89
- Standard Mist Lubricators....90-93
- Hi-Flow Mist Lubricators....94-95

Combinations
- Miniature Combinations....96-99
- Compact & Standard Combinations....100-103

Safety Guide....106-107

Offer of Sale....108

Parker Hannifin Corporation
Pneumatic Division
Richland, Michigan
www.wattsfluidair.com

Particulate and Coalescing Filters

Filtration

The average 10-hp compressor handles four million cubic inches of air per hour. This air can contain billions of contaminating particles.

At high concentration and high speed, these particles can be extremely harmful. They block orifices, erode components, and clog clearances between moving parts.

In addition, when ambient air is drawn into a compressor, it can, depending on weather conditions, have relative humidity up to 100 percent. As air is compressed and cooled, some water vapor1 condenses out as free water, and even with a compressor aftercooler, some moisture is swept downstream into the air system. This may result in rusted pneumatic tools and components, contaminated lubricants, and frozen air lines during low temperature periods.

Other types of foreign matter in air lines include: impurities generated within the air line, such as wear particles, pipe scale and rust; construction and assembly debris; and contaminants introduced into the air system during maintenance or through leakage passages.

All these contaminants, which are of a size to cause air stream problems, should be removed by the filter.

[1] Water vapor, which is a gas, is not a contaminant in pneumatic systems until it condenses.

How to Select the Proper Filter

Filter element rating is the prime selection criterion. This rating must match the requirements of all downstream components. Next, the flow capacity and pressure rating of the filter should be considered. Finally, port size should match system piping to avoid unnecessary pressure drops through restricting adapters.

Bowl material and the type of drain for the application are other choices to be made.

The first step in choosing a filter is to determine the filtration requirements of the most critical components used in that system.

Contamination particle size is measured in micrometers. A micrometer is one millionth of a meter or 0.000039 inches. Frequently, micrometer is abbreviated as micron or symbolized by the Greek letter μ. Particle-removing filter elements are rated2 according to the particle size they will trap. For most industrial applications, filter elements rated at 40 microns are adequate. When necessary, filtration as low as 5 microns or finer can be provided. Remember, however, that finer filtration increases the pressure drop through the element. As micron size rating varies, so does the size and type of filter.

Most oils entrained in a compressed air stream are in the form of tiny mist or aerosol droplets which can pass through a standard industrial filter element. If it is necessary to remove these aerosols, an oil-removal type coalescing filter can be used. The sub-micron oil particles which escape an oil-removal filter should have no detrimental effect on industrial pneumatic components. But if these particles must be removed for applications such as spray painting, a coalescing type element should be used.

[2] The inexact nominal filter element rating indicates that most particles that size or larger will be trapped. The absolute rating indicates that all particles that size or larger will be trapped.

Filter Construction

Most pneumatic filters consist of two basic elements: a die-cast body, into which the inlet and outlet piping is connected, and a sealed removable bowl which contains collected contaminants.

The bowl is fitted with a drain mechanism to remove liquids before they rise to the baffle level. The drain system usually operates while the filter is under pressure, but the unit must be exhausted to remove the bowl for cleaning and element service. The piping need not be disturbed

Generally a transparent bowl is the most convenient because it provides easy visual inspection of the sump level. However, hostile environment, higher pressure, or higher temperature may require a metal bowl for safety.

The most common plastic used for bowls is polycarbonate. This material performs satisfactorily for air pressures below 150 PSIG and temperatures between 40° and 120° F. Parker offers polyethylene bowl guards for added safety.

As the pressure or temperature requirement increases, you may have to specify a metal bowl with sight gauge. For extreme conditions, it is recommended that the sight gauge be eliminated. (Please refer to the individual model descriptions for specifications on bowls.)

Thus, the environment determines the choice of bowl. Polycarbonates offer great strength and visibility, but can be attacked by certain chemicals. Metal bowls offer the highest pressure and temperature rating, and provide superior protection when installed in an environment containing chemicals that are incompatible with polycarbonate.

Filter Operation

When pressurized air enters a typical filter body. The curved inlet and deflector direct the incoming air in a downward whirling pattern. Centrifugal force hurls the larger solid and liquid water particles outward where they collect on the inner surface of the filter bowl. The particles spiral down past a baffle into a quiet chamber. The baffle prevents turbulent air in the upper bowl from re-entraining liquid contaminants and carrying them downstream.

Then the dry, cleaner air follows a convoluted path through the filter element, where finer solid particles are filtered out. Finally, filtered air passes up the center of the element and out the discharge port.

Parker Hannifin Corporation
Pneumatic Division
Richland, Michigan
www.wattsfluidair.com

Particulate and Coalescing Filters

⚠ Warning

The plastic material used to manufacture the plastic bowls, and the sight gauge on metal bowls, may be attacked by certain chemicals. Do not use this filter on systems with air supplied by a compressor lubricated with synthetic oils or oils containing phosphate esters or chlorinated hydrocarbons. These oils can carry over into the air lines and chemically attack and possibly rupture the bowl or sight gauge. Also, do not expose the bowl or sight gauge to materials such as carbon tetrachloride, trichlorethylene, acetone, paint thinner, cleaning fluids, or other harmful materials, for they too will cause the plastic to craze and/or rupture. For use in environments where these, or any, chemicals may be present, consult the factory for approval.

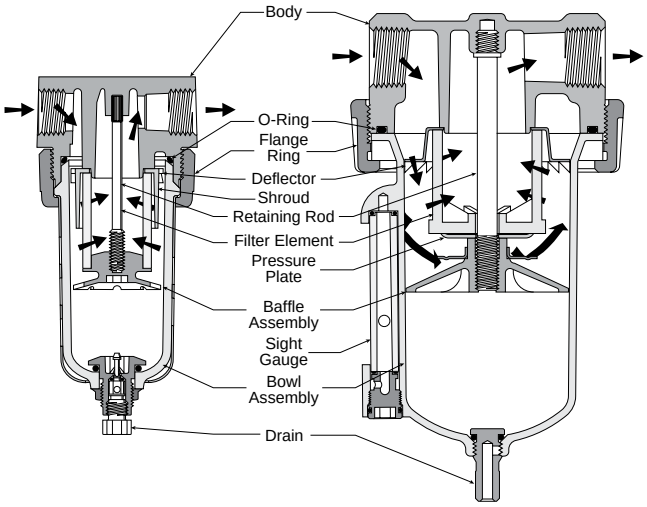

Particulate Filters

Coalescing Filters

These high-efficiency filters operate on a somewhat different principle than particulate air filters. The key difference is in the element, where a fiber network is narrowly spaced to trap smaller contaminants. The special fibers hold any liquid particle which contacts them.

Pre-filtered (A particulate filter must be used prior to a coalescing filter) air enters the cylindrical element at the center. As it flows through the element, particles are captured by three different mechanisms: direct interception as particles impinge on the fibers; inertial impaction as particles are thrown against fibers by the turbulent air stream; and diffusion as smaller particles vibrate with Brownian movement to collide with fibers and other particles. As a result, coalescing elements can capture particles smaller than the nominal size of the flow passages through the element.

Collected liquid migrates to the crossing points of the fibers where larger drops form or coalesce. Pressure differential through the element then forces these drops to the downstream surface of the element where they gravitate downward to the sump.

The filtered air then exits through the outlet port.

It is very important that the air be pre-filtered, as larger contaminants tend to block the passages between fibers, reducing the efficiency of the coalescing element.

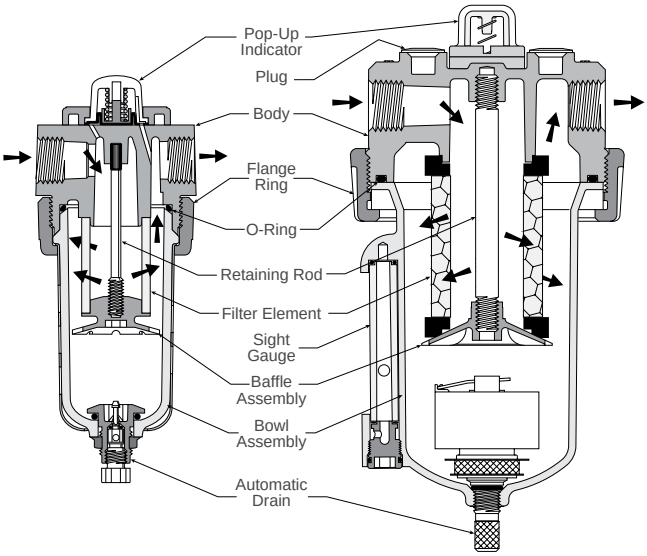

Coalescing Filters

Parker Hannifin Corporation
Pneumatic Division
Richland, Michigan
www.wattsfluidair.com

14F Filters – Miniature

Features

- Excellent water removal efficiency
- Unique deflector plate that creates swirling of the air stream ensuring maximum water and dirt separation
- Easily disassembled for servicing without the use of tools
- 5 Micron element standard
- Interchangable twist and automatic pulse drains
- High flow: 1/8" – 22 SCFM[§]
  1/4" – 24 SCFM[§]

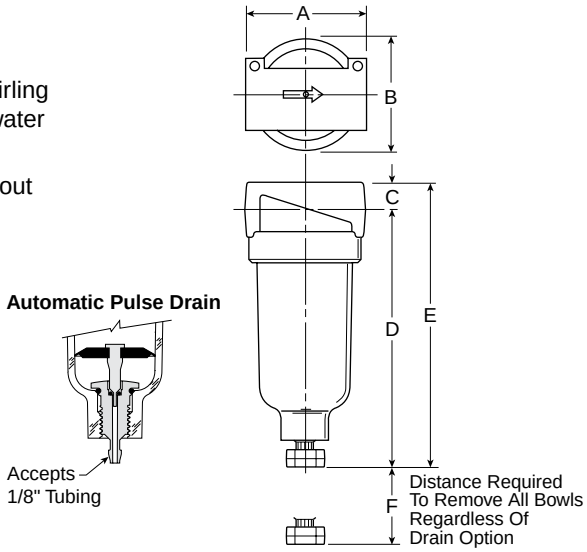

Port Size	NPT	
	Twist Drain	Automatic Pulse Drain
Poly Bowl ‡		
1/8"	**14F01B***	**14F05B***
1/4"	**14F11B***	**14F15B***
Metal Bowl without Sight Gauge		
1/8"	**14F03B***	**14F07B***
1/4"	**14F13B***	**14F17B***

Standard part numbers shown bold.
For other models refer to ordering information below.

‡ For polycarbonate bowl see Caution on page inside cover.

§ SCFM = Standard cubic feet per minute at 90 PSIG inlet and 5 PSIG pressure drop.

14F Filter Dimensions		
A 1.69 (43)	**B** 1.53 (39)	**C** .39 (10)
D 3.82 (97)	**D**† 3.87 (99)	**E** 4.21 (107)
E† 4.26 (108)	**F** 1.60 (41)	

Inches (mm)

† With Automatic Pulse Drain.

Ordering Information

14F	1	1	B	*	

Port Size
- **0 1/8 Inch**
- **1 1/4 Inch**

Bowl Options

Polycarbonate Bowl
- **1 Twist Drain**
- **5 Automatic Pulse Drain**

Metal Bowl
- **3 Twist Drain**
- **7 Automatic Pulse Drain**

Elements
- A 40 Micron
- **B 5 Micron**
- Z Adsorber

Engineering Level
- * Will be Entered at Factory

Port Type
- **Blank NPT**
- 1 BSPP
- 2 BSPT

BOLD ITEMS ARE MOST POPULAR.

Parker Hannifin Corporation
Pneumatic Division
Richland, Michigan
www.wattsfluidair.com

Technical Information

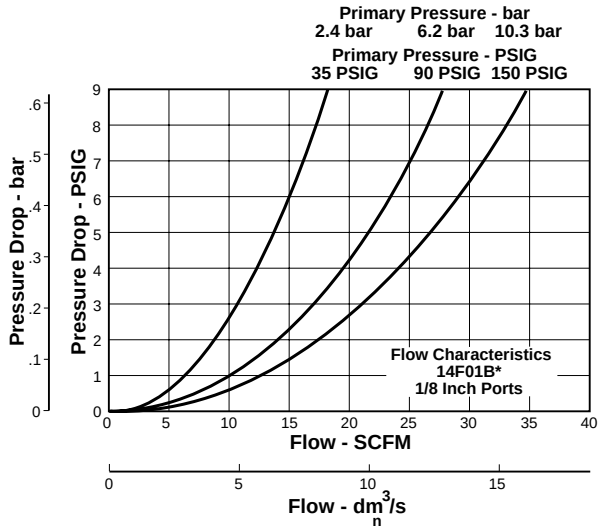

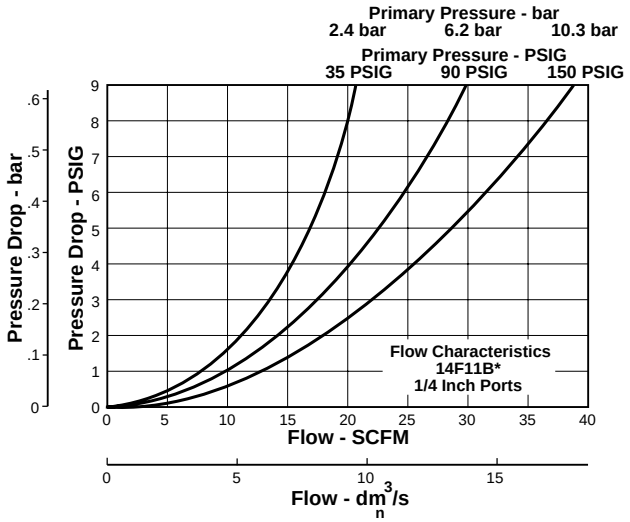

⚠ CAUTION:

Polycarbonate bowls and sight dome, being transparent and tough, are ideal for use with Filters and Lubricators. They are suitable for use in normal industrial environments, but should not be located in areas where they could be subjected to direct sunlight, an impact blow, nor temperatures outside of the rated range. As with most plastics, some chemicals can cause damage. Polycarbonate bowls and sight dome should not be exposed to chlorinated hydro-carbons, ketones, esters and certain alcohols. They should not be used in air systems where compressors are lubricated with fire-resistant fluids such as phosphate ester and di-ester types.

Metal bowls are recommended where ambient and/or media conditions are not compatible with polycarbonate bowls. Metal bowls resist the action of most such solvents, but should not be used where strong acids or bases are present or in salt laden atmospheres. Consult the factory for specific recommendations where these conditions exist.

TO CLEAN POLYCARBONATE BOWLS USE MILD SOAP AND WATER ONLY! DO NOT use cleansing agents such as acetone, benzene, carbon tetrachloride, gasoline, toluene, etc., which are damaging to this plastic.

Metal bowl guards are recommended for all applications.

14F Filter Kits & Accessories

Bowl Kits –
- Poly Bowl –
  - Automatic Pulse Drain PS408B
  - Twist Drain PS404
- Metal Bowl –
  - Automatic Pulse Drain PS451B
  - Twist Drain PS447B

Filter Element Kits –
- 40 Micron PS401
- 5 Micron PS403
- 5 Micron Cartridge Kit PS407
- Adsorber PS452

Mounting Bracket Kit PS417B

Specifications

Automatic Pulse Drain Tube Barb ..... 1/8 Inch

Bowl Capacity ..... 1 Ounce

Port Threads ..... 1/8, 1/4 Inch

Pressure & Temperature Ratings –
- Polycarbonate Bowl ..... 0 to 150 PSIG (0 to 10.3 bar)
  32°F to 125°F (0°C to 52°C)
- Metal Bowl ..... 0 to 250 PSIG (0 to 17.2 bar)
  32°F to 175°F (0°C to 80°C)
- Automatic Pulse Drain ..... 10 to 250 PSIG (0.7 to 17.2 bar)
  at 125°F (52°C) or less

Weight ..... 0.41 lb. (0.18 kg)

Materials of Construction

Body ..... Zinc

Bowls ..... Transparent Polycarbonate
Metal (Zinc) Bowl w/o Sight Gauge

Deflector, Element Holder & Baffle ..... Plastic

Drains –
- Twist Drain –
  - Body & Stem ..... Plastic
  - Seals ..... Nitrile
- Automatic Pulse Drain –
  - Piston & Seals ..... Nitrile
  - Stem, Seat, Adaptor & Washers ..... Aluminum

Filter Elements –
- 5 Micron (Standard) ..... Plastic
- 40 Micron (Optional) ..... Plastic
- Adsorber (Optional) ..... Activated Charcoal

Seals ..... Nitrile

Parker Hannifin Corporation
Pneumatic Division
Richland, Michigan
www.wattsfluidair.com

F504 Filters – Miniature

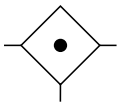

Features

- Excellent water removal efficiency
- Unique deflector plate that creates swirling of the air stream ensuring maximum water and dirt separation
- Easily disassembled for servicing without the use of tools
- Interchangeable twist and automatic pulse drains
- High flow: 22 SCFM [§]

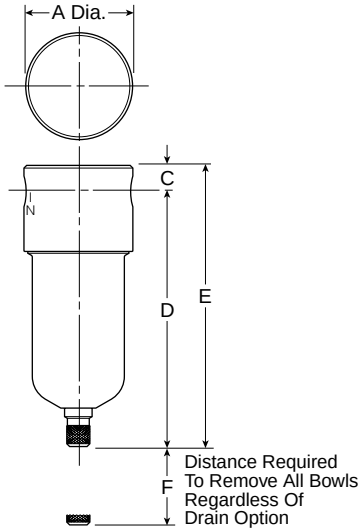

Port Size	NPT	
	Twist Drain	Automatic Pulse Drain
Polycarbonate Bowl [‡]		
1/8"	**F504-01AH**	**F504-01AHS**
1/4"	**F504-02AH**	**F504-02AHS**
Metal Bowl without Sight Gauge		
1/8"	**F504-01DH**	**F504-01DHS**
1/4"	**F504-02DH**	**F504-02DHS**

Standard part numbers shown bold.
For other models refer to ordering information below.

[‡] For polycarbonate bowl see Caution on page inside cover.

[§] SCFM = Standard cubic feet per minute at 90 PSIG inlet and 5 PSIG pressure drop.

F504 Filter Dimensions		
A 1.56 (39.7)	**C** 0.38 (9.5)	**D** 3.78 (96)
D[†] 3.62 (92)	**E** 4.16 (105.6)	**E**[†] 4.00 (101.6)
F .75 (77)	**F**[†] .75 (77)	

Inches (mm)

[†] With Metal Bowl

Ordering Information

F	504	—	01	A	H		/**

Port Threads
- **— NPT**
- G BSPP

Port Size
- **01 1/8 Inch**
- **02 1/4 Inch**

Bowl
- **A Polycarbonate**
- D Metal

Elements
- G 5 Micron
- **H 20 Micron**

Drains and Options
- **Blank Manual Twist Drain**
- S Automatic Pulse Drain
- U Semi-Auto Drain
- X11 No Internal Parts
- X33* Polyurethane Bowl
- X64 Fluorocarbon Seals
- X67 With Mounting Bracket

* Add .65" to overall length.

Engineering Change Designator
- Will be entered at factory.

BOLD ITEMS ARE MOST POPULAR.

Parker Hannifin Corporation
Pneumatic Division
Richland, Michigan
www.wattsfluidair.com

Technical Information

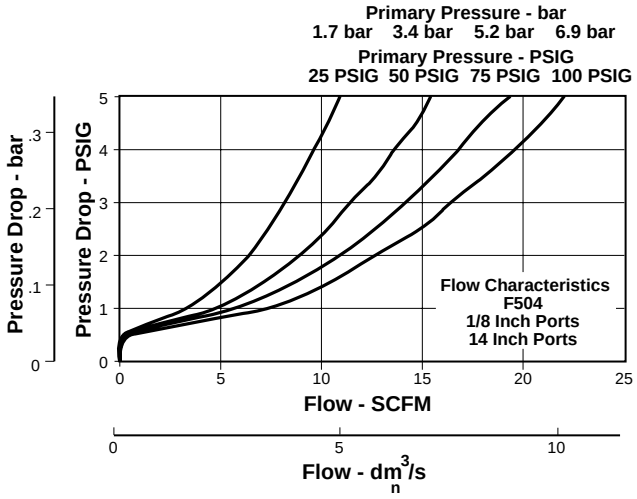

F504 Filter Kits & Accessories

Bowl Kits –
- Metal (D) BK505Y
- Metal (D) with Automatic Pulse Drain BK505SY
- Polycarbonate (A) BK504Y
- Polycarbonate (A) with Automatic Pulse Drain BK504SY

Drain Kits –
- Automatic Pulse Drain RK504SY
- Manual Twist Drain SA600Y7-1
- Semi-Automatic "Overnight" Drain SA602A7
  (Drains automatically under zero pressure)

Filter Element Kits –
- 5 Micron (All) EK504VY
- 20 Micron (All) EK504Y

Mounting Bracket Kit ..... Must be Ordered with Filter

( ) = BOWL TYPE

Specifications

Bowl Capacity ..... 1 Ounce

Port Threads ..... 1/8, 1/4 Inch

Pressure & Temperature Ratings –
- Polycarbonate Bowl ..... 0 to 150 PSIG (0 to 10.2 bar)
  40°F to 125°F (4.4°C to 52°C)
- Metal Bowl ..... 0 to 300 PSIG (0 to 20.4 bar)
  40°F to 180°F (4.4°C to 82.2°C)
- With Automatic Pulse Drain ..... 175 PSIG Max. Press. (11.9 bar)

Weight
- Polycarbonate Bowl ..... 0.3 lb. (0.14 kg) / Unit
  7 lb. (3.18 kg) / 24-Unit Master Pack
- Metal Bowl ..... 0.5 lb. (0.23 kg) / Unit
  12 lb. (5.44 kg) / 24-Unit Master Pack

Materials of Construction

Body ..... Aluminum

Bowls ..... Polycarbonate
Metal (Zinc)

Drains ..... Brass

Filter Elements ..... Polypropylene

Seals ..... Nitrile

Parker Hannifin Corporation
Pneumatic Division
Richland, Michigan
www.wattsfluidair.com

F602 Filters – Compact

Features

- Excellent water removal efficiency
- Unique deflector plate and shroud creates a swirling of the air stream ensuring maximum water and dirt separation
- Large filter element surface guarantees low pressure drop and increased element life
- Optional automatic float drain available
- Shown with recommended metal bowl guard
- High flow: 1/4" – 53 SCFM§
  3/8" – 80 SCFM§
  1/2" – 85 SCFM§

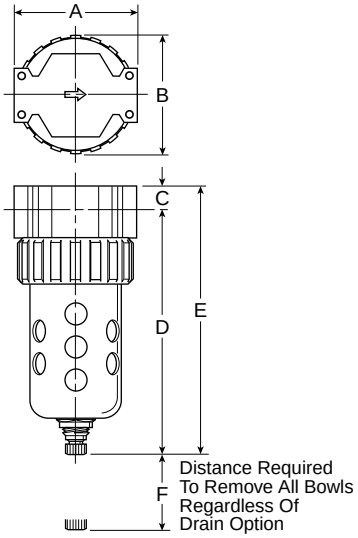

Port Size	NPT	
	Twist Drain	Automatic Float Drain
Poly Bowl‡ / Metal Guard		
1/4"	**F602-022A***	**F602-026A***
3/8"	**F602-032A***	**F602-036A***
1/2"	**F602-042A***	**F602-046A***
Metal Bowl / Sight Gauge		
1/4"	**F602-024A***	**F602-028A***
3/8"	**F602-034A***	**F602-038A***
1/2"	**F602-044A***	**F602-048A***

Standard part numbers shown bold.
For other models refer to ordering information below.

‡ For polycarbonate bowl see Caution on inside cover.

§ SCFM = Standard cubic feet per minute at 90 PSIG inlet and 5 PSIG pressure drop.

F602 Filter Dimensions			
A	**B**	**C**	**D**
2.81 (71)	2.74 (70)	.53 (13)	5.69 (145)
D†	**E**	**E†**	**F**
5.74 (146)	6.22 (158)	6.27 (159)	2.25 (57)

Inches (mm)

† With Automatic Float Drain

Ordering Information

F602	—	02	2	A	*	

Port Threads
- **— NPT**
- G* BSPP

* 1/4 & 3/8 inch meet ISO 1179-1 Standard.

Port Size
- **02 1/4 Inch**
- **03 3/8 Inch**
- **04 1/2 Inch**

Bowl Options

Polycarbonate Bowl
- **2 Metal Bowl Guard / Twist Drain**
- **6 Metal Bowl Guard / Auto Float Drain**

Metal Bowl
- 3 Twist Drain
- **4 Sight Gauge / Twist Drain**
- 7 Auto Float Drain
- **8 Sight Gauge / Auto Float Drain**

Element
- **A 40 Micron**

Engineering Level
- * Will be Entered at Factory.

Options
- **Blank None**

BOLD ITEMS ARE MOST POPULAR.

Parker Hannifin Corporation
Pneumatic Division
Richland, Michigan
www.wattsfluidair.com

Technical Information

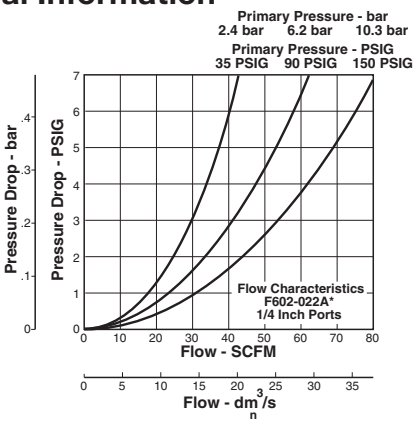

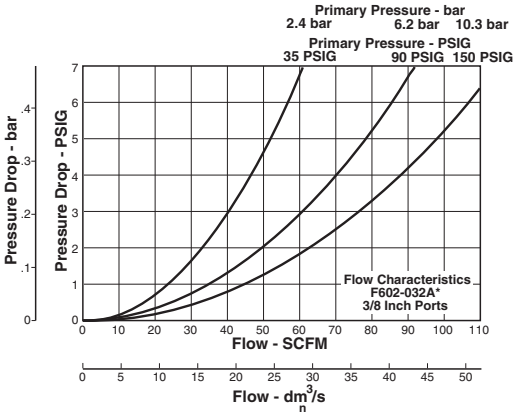

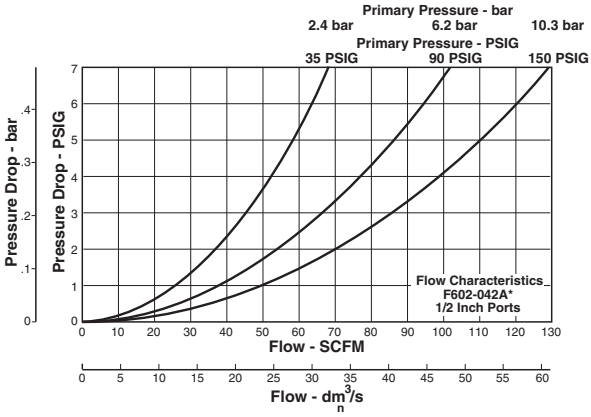

F602 Filter Kits & Accessories

Bowl Guard Kit PS705

Bowl Kits –
- Poly Bowl –
  - Automatic Float Drain PS722
  - Twist Drain PS732
- *Polycarbonate (B) (Old F602)* *BK602Y*
- Metal Bowl –
  - Automatic Float Drain PS726
  - Twist Drain PS734
  - Sight Gauge / Automatic Float Drain PS723
  - Sight Gauge / Twist Drain PS735
- *Metal with Sight Gauge (W) (Old F602)* *BK605WY*

DPI Replacement Kit PS781

Drain Kits –
- Automatic Float Drain PS506
- Twist Drain PS512
- *Internal Auto (All) (Old F602)* *SA602MD*
- *Manual Twist (All) (Old F602)* *SA600Y7-1*

Filter Element Kits –
- 40 Micron *(New style units)* PS701

Mounting Bracket Kit PS743

Mounting Bracket Kit *(Old F602)* ..... *(All) SAF602-0571*

Sight Gauge Kit PS914

Specifications

Bowl Capacity ..... 4.4 Ounces

Sump Capacity ..... 1.75 Ounces

Port Threads ..... 1/4, 3/8, 1/2 Inch

Pressure & Temperature Ratings –

Without Differential Pressure Indicator:
Polycarbonate Bowl – 0 to 150 PSIG (0 to 10.3 bar)
32°F to 125°F (0°C to 52°C)
Metal Bowl – 0 to 250 PSIG (0 to 17.2 bar)
32°F to 175°F (0°C to 80°C)
With Differential Pressure Indicator: 0 to 150 PSIG (0 to 10.3 bar)
32°F to 125°F (0°C to 52°C)
Automatic Float Drain – 15 to 250 PSIG (1.0 to 17.2 bar)

Weight ..... 1.4 lb. (0.6 kg)

Materials of Construction

Body ..... Zinc

Bowls ..... Transparent Polycarbonate or Metal (Zinc) With or Without Sight Gauge

Bowl Guards ..... Steel

Collar ..... Plastic

Deflector, Shroud & Baffle ..... Plastic

Drains –
- Twist Drain – Body & Nut ..... Plastic
- Automatic Float Drain – Housing, Float ..... Plastic
  - Seals ..... Nitrile
  - Springs, Push Rod ..... Stainless Steel

Filter Elements –
- 40 Micron (Standard) ..... Plastic
- Adsorber (Optional) ..... Activated Charcoal

Seals ..... Nitrile

Sight Gauge ..... Nylon

Parker Hannifin Corporation
Pneumatic Division
Richland, Michigan
www.wattsfluidair.com

F602 Filters – Standard

Features

- Excellent water removal efficiency
- Unique deflector plate and shroud creates a swirling of the air stream ensuring maximum water and dirt separation
- Large filter element surface guarantees low pressure drop and increased element life
- Optional automatic float drain available
- Shown with recommended metal bowl guard
- High flow: 3/4" – 145 SCFM§

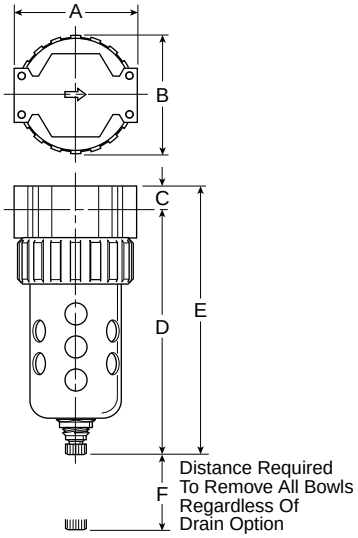

Port Size	NPT	
	Twist Drain	Automatic Float Drain
Poly Bowl‡ / Metal Guard		
3/4"	**F602-062A***	**F602-066A***
Metal Bowl / Sight Gauge		
3/4"	**F602-064A***	**F602-068A***

Standard part numbers shown bold.
For other models refer to ordering information below.

‡ For polycarbonate bowl see Caution on inside cover.

§ SCFM = Standard cubic feet per minute at 90 PSIG inlet and 5 PSIG pressure drop.

F602 Filter Dimensions			
A	**B**	**C**	**D**
3.24 (82)	3.25 (83)	.70 (18)	6.97 (177)
D†	**E**	**E†**	**F**
7.00 (178)	7.67 (195)	7.70 (196)	2.75 (70)

Inches (mm)

† With Automatic Float Drain

Ordering Information

F602	—	06	2	A	*	

Port Threads
- — **NPT**
- G BSPP

Port Size
- **06 3/4 Inch**

Bowl Options

Polycarbonate Bowl	Metal Bowl
2 Metal Bowl Guard / Twist Drain	3 Twist Drain
6 Metal Bowl Guard / Auto Float Drain	**4 Sight Gauge / Twist Drain**
	7 Auto Float Drain
	8 Sight Gauge / Auto Float Drain

Element
- **A 40 Micron**

Engineering Level
- * Will be Entered at Factory.

Options
- **Blank None**

BOLD ITEMS ARE MOST POPULAR.

Parker Hannifin Corporation
Pneumatic Division
Richland, Michigan
www.wattsfluidair.com

Technical Information

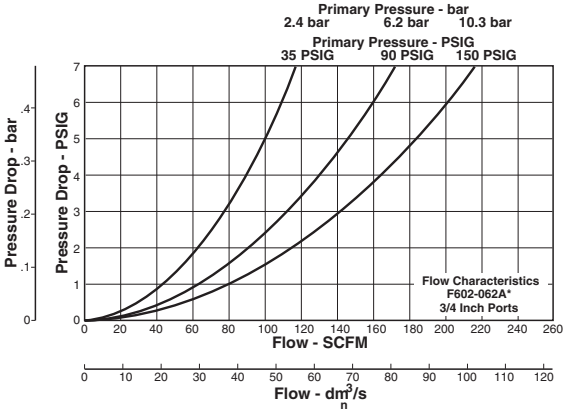

F602 Filter Kits & Accessories

Bowl Guard Kit PS805

Bowl Kits –
- Poly Bowl –
  - Automatic Float Drain PS822
  - Twist Drain PS832
- *Polycarbonate with Plastic Bowl Guard (B) (Old F602)* *BK602A*
- Metal Bowl –
  - Automatic Float Drain PS826
  - Twist Drain PS834
  - Sight Gauge / Automatic Drain PS823
  - Sight Gauge / Twist Drain PS835
- *Aluminum (E) (Old F602)* *BK603A*
- *Metal with Sight Gauge (W) (Old F602)* *BK605WA*

DPI Replacement Kit PS781

Drain Kits –
- Automatic Float Drain PS506
- Twist Drain PS512
- *External Auto (B,W) (Old F602)* *SA602D*
- *External Auto (E) (Old F602)* *SA603D*
- *Internal Auto (All) (Old F602)* *SA602MD*
- *Manual Twist (All) (Old F602)* *SA600Y7-1*

Filter Element Kits –
- 40 Micron *(New style units)* PS801

Mounting Bracket Kit PS843

Mounting Bracket Kit *(Old F602)* ..... *(All) SAF602-0572*

Sight Gauge Kit PS914

Specifications

Bowl Capacity ..... 7.2 Ounces

Sump Capacity ..... 2.8 Ounces

Port Threads ..... 1/2, 3/4 Inch

Pressure & Temperature Ratings –

Without Differential Pressure Indicator:

Polycarbonate Bowl – 0 to 150 PSIG (0 to 10.3 bar)
32°F to 125°F (0°C to 52°C)

Metal Bowl – 0 to 250 PSIG (0 to 17.2 bar)
32°F to 175°F (0°C to 80°C)

With Differential Pressure Indicator: 0 to 150 PSIG (0 to 10.3 bar)
32°F to 125°F (0°C to 52°C)

Automatic Float Drain – 15 to 250 PSIG (1.0 to 17.2 bar)

Weight ..... 2.2 lb. (1.0 kg)

Materials of Construction

Body ..... Zinc

Bowls ..... Transparent Polycarbonate
Metal (Zinc) With or Without Sight Gauge

Bowl Guards ..... Steel

Collar ..... Plastic or Metal

Deflector, Shroud & Baffle ..... Plastic

Drains –
- Twist Drain – Body & Nut ..... Plastic
- Automatic Float Drain –
  - Housing, Float ..... Plastic
  - Seals ..... Nitrile
  - Springs, Push Rod ..... Stainless Steel

Filter Elements –
- 40 Micron (Standard) ..... Plastic
- Adsorber (Optional) ..... Activated Charcoal

Seals ..... Nitrile

Sight Gauge ..... Nylon

Parker Hannifin Corporation
Pneumatic Division
Richland, Michigan
www.wattsfluidair.com

F602 Filters – Hi-Flow

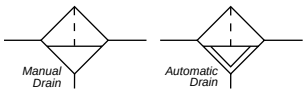

Features

- Excellent water removal efficiency
- For heavy duty applications with minimum pressure drop requirement
- Unique deflector plate that creates swirling of the air stream ensuring maximum water and dirt separation
- Large filter element surface guarantees low pressure drop and increased element life
- 40 micron filter element standard, 5 micron available
- Metal bowl with sight gauge standard
- Twist drain as standard, optional auto drain
- Large bowl capacity
- Optional high capacity bowl(s) available
- High flow: 3/4" – 270 SCFM§
  1" – 300 SCFM§

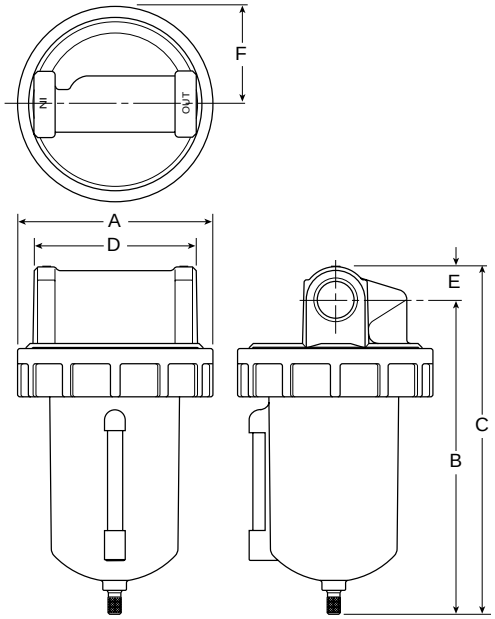

Port Size	NPT	
	Twist Drain	Automatic Pulse Drain
Metal Bowl / Sight Gauge - 16 oz.		
3/4"	**F602-06WJ**	**F602-06WJR**
1"	**F602-08WJ**	**F602-08WJR**
Metal Bowl without Sight Gauge - 32 oz.		
3/4"	**F602-06EJ**	**F602-06EJR**
1"	**F602-08EJ**	**F602-08EJR**

Standard part numbers shown bold.
For other models refer to ordering information below.
§ SCFM = Standard cubic feet per minute at 90 PSIG inlet and 5 PSIG pressure drop.

F602 Filter Dimensions					
A	B	C	D	E	F
F602-06W, F602-08W					
4.90 (124)	7.88 (200)	8.72 (221)	4.06 (103)	.84 (21)	2.45 (62)
F602-06E, F602-08E					
4.90 (124)	11.10 (282)	11.94 (303)	4.06 (103)	.84 (21)	2.45 (62)

inches (mm)

Ordering Information

F	602	—	06	W	J		/**

Port Threads
- **— NPT**
- G BSPP

Port Size
- **06 3/4 Inch**
- **08 1 Inch**

Bowl
- **E 32 oz. Large Capacity Metal without Sight Gauge**
- **W 16 oz. Metal with Sight Gauge**

Element
- G 5 Micron
- **J 40 Micron**

Drains and Options
- **Blank Manual Twist Drain**
- Q External Heavy Duty Auto Drain
- **R Internal Auto Drain**

Engineering Level
- * Will be Entered at Factory.

BOLD ITEMS ARE MOST POPULAR.

Parker Hannifin Corporation
Pneumatic Division
Richland, Michigan
www.wattsfluidair.com

Technical Information

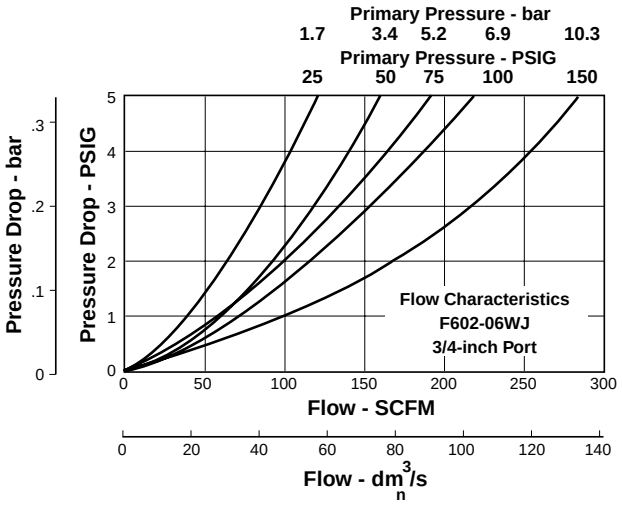

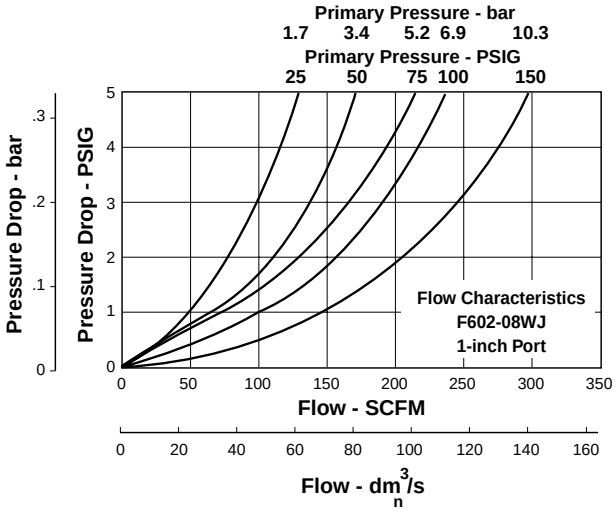

"Q" Option External Heavy Duty Auto Drain SA602D / SA603D
For heavy duty applications where the filter is being used to remove large volumes of liquid and/or particulate matter from the airstream, the external automatic drain ("Q" option) should be used.

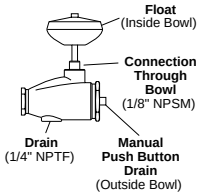

F602 Filter Kits & Accessories

Bowl Kits –
Aluminum (E) BK603B
Zinc with Sight Gauge (W) BK605WB

Drain Kits –
External Auto (E) SA603D
External Auto (W) SA602D
Internal Auto (All) SA602MD
Manual (All) SA600Y7-1
Semi-Automatic "Overnight" Drain SA602A7
(Drains automatically under zero pressure)

Filter Element Kits –
40 Micron (All) EK602B
5 Micron (All) EK602VB

Mounting Bracket Kit
(Pair or 2 Kits Pipe Mounted Brackets needed) –
(3/4" Unit) SA200AW57
(1" Unit) SA200CW57

Repair Kits –
Deflector, Baffle Assembly, and Retaining Rod (E,W) RK602B
External Auto Drain (All) RK602D
Internal Auto Drain (All) RK602MD
Metal Bowl Sight Gauge (W) RKB605WB

Specifications

Bowl Capacity –
Aluminum Bowl (E) ..... 32 Ounces
Zinc Bowl (W) ..... 16 Ounces

Port Threads ..... 3/4, 1 Inch

( ) = Bowl Type

Pressure & Temperature Ratings –
Aluminum Bowl (E) ..... 0 to 300 PSIG (0 to 20.4 bar)
40°F to 150°F (4.4°C to 65.6°C)
Zinc (W) ..... 0 to 250 PSIG (0 to 17.2 bar)
40°F to 150°F (4.4°C to 65.6°C)
With Internal Auto Drain (R) ..... 20 to 175 PSIG (1.4 to 11.9 bar)
40°F to 125°F (4.4°C to 52°C)
With External Auto Drain (Q) ..... 30 to 250 PSIG (0 to 17.2 bar)
40°F to 150°F (4.4°C to 65.6°C)

Weight –
Aluminum Bowl (E) ..... 7 lb. (3.18 kg) / Unit
28 lb. (12.70 kg) / 4-Unit Master Pack
Zinc Bowl (W) ..... 6.3 lb. (2.86 kg) / Unit
25 lb. (11.34 kg) / 4-Unit Master Pack

Materials of Construction

Body ..... Zinc

Bowls –
(E) ..... Aluminum without Sight Gauge
(W) ..... Zinc with Sight Gauge

Drain –
Manual Twist & Overnight ..... Brass
Housing "R" ..... Acetal
Housing "Q" ..... Bronze

Filter Elements –
40 Micron (Standard) ..... Polypropylene
5 Micron (Optional) ..... Polypropylene

Seals ..... Nitrile

Sight Gauge ..... Nylon

Parker Hannifin Corporation
Pneumatic Division
Richland, Michigan
www.wattsfluidair.com

F602 Filters – Hi-Flow

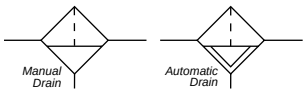

Features

- Excellent water removal efficiency
- For heavy duty applications with minimum pressure drop requirement
- Unique deflector plate that creates swirling of the air stream ensuring maximum water and dirt separation
- Large filter element surface guarantees low pressure drop and increased element life
- 40 micron filter element standard, 5 micron available
- Metal bowl with sight gauge standard
- Twist drain as standard, optional auto drain
- Large bowl capacity
- Optional high capacity bowl(s) available
- High flow: 1-1/4" – 390 SCFM§
  1-1/2" – 450 SCFM§

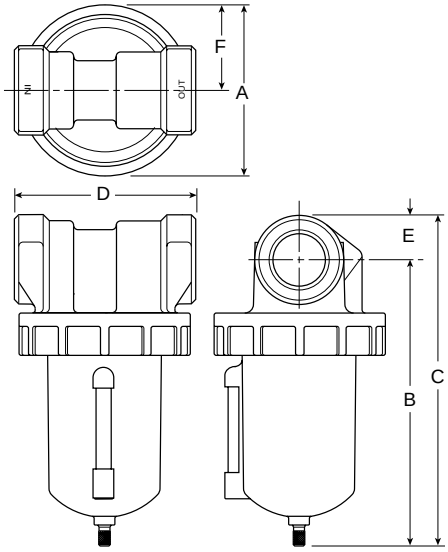

Port Size	NPT	
	Twist Drain	Automatic Pulse Drain
Metal Bowl / Sight Gauge - 16 oz.		
1-1/4"	**F602-10WJ**	**F602-10WJR**
1-1/2"	**F602-12WJ**	**F602-12WJR**
Metal Bowl without Sight Gauge - 32 oz.		
1-1/4"	**F602-10EJ**	**F602-10EJR**
1-1/2"	**F602-12EJ**	**F602-12EJR**

Standard part numbers shown bold.
For other models refer to ordering information below.
§ SCFM = Standard cubic feet per minute at 90 PSIG inlet and 5 PSIG pressure drop.

F602 Filter Dimensions					
A	B	C	D	E	F
F602-10W, F602-12W					
4.90 (124)	8.18 (208)	9.46 (240)	5.19 (132)	1.28 (32.4)	2.45 (62.2)
F602-10E, F602-12E					
4.90 (124)	11.41 (290)	12.69 (322)	5.19 (132)	1.28 (32.4)	2.45 (62.2)

inches (mm)

Ordering Information

F	602	—	10	W	J		/**

Port Threads
- **— NPT**
- G BSPP

Port Size
- **10 1-1/4 Inch**
- **12 1-1/2 Inch**

Bowl
- **E 32 oz. Large Capacity Metal without Sight Gauge**
- **W 16 oz. Metal with Sight Gauge**

Element
- G 5 Micron
- **J 40 Micron**

Drains and Options
- **Blank Manual Twist Drain**
- Q External Heavy Duty Auto Drain
- **R Internal Auto Drain**

Engineering Level
- * Will be Entered at Factory.

BOLD ITEMS ARE MOST POPULAR.

Parker Hannifin Corporation
Pneumatic Division
Richland, Michigan
www.wattsfluidair.com

Technical Information

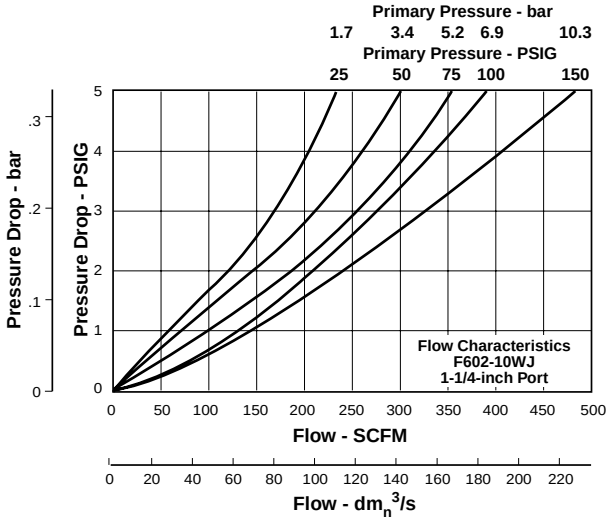

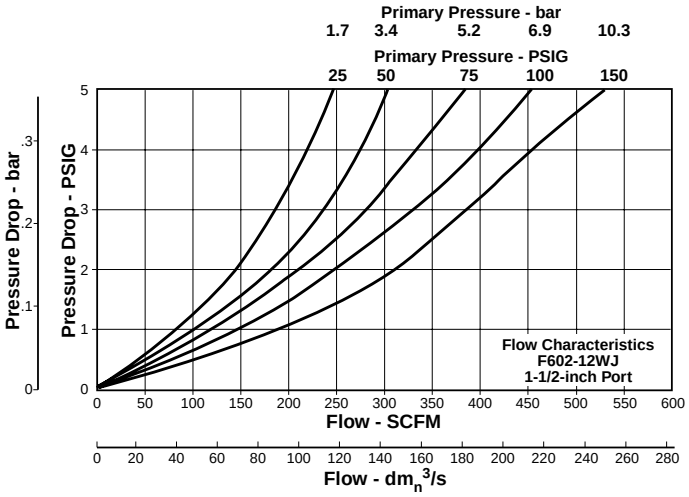

"Q" Option External Heavy Duty Auto Drain SA602D / SA603D
For heavy duty applications where the filter is being used to remove large volumes of liquid and/or particulate matter from the airstream, the external automatic drain ("Q" option) should be used.

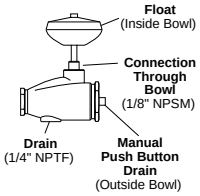

F602 Filter Kits & Accessories

Bowl Kits –
- Aluminum (E) BK603B
- Zinc with Sight Gauge (W) BK605WB

Drain Kits –
- External Auto (E) SA603D
- External Auto (W) SA602D
- Internal Auto (All) SA602MD
- Manual (All) SA600Y7-1
- Semi-Automatic "Overnight" Drain SA602A7
  (Drains automatically under zero pressure)

Filter Element Kits –
- 40 Micron (All) EK602B
- 5 Micron (All) EK602VB

Repair Kits –
- Deflector, Baffle Assembly, and Retaining Rod (All) RK602C
- External Auto Drain (All) RK602D
- Internal Auto Drain (All) RK602MD
- Metal Bowl Sight Gauge (W) RKB605WB

Specifications

Bowl Capacity –
- Aluminum (E) ..... 32 Ounces
- Zinc (W) ..... 16 Ounces

Port Threads ..... 1-1/4, 1-1/2 Inch

( ) = Bowl Type

Pressure & Temperature Ratings –
- Aluminum Bowl (E) ..... 0 to 300 PSIG (0 to 20.4 bar)
  40°F to 150°F (4.4°C to 65.6°C)
- Zinc (W) ..... 0 to 250 PSIG (0 to 17.2 bar)
  40°F to 150°F (4.4°C to 65.6°C)
- With Internal Auto Drain (R) ..... 20 to 175 PSIG (1.4 to 11.9 bar)
  40°F to 125°F (4.4°C to 52°C)
- With External Auto Drain (Q) ..... 30 to 250 PSIG (0 to 17.2 bar)
  40°F to 150°F (4.4°C to 65.6°C)

Weight –
- Aluminum Bowl (E) ..... 7.7 lb. (3.49 kg) / Unit
  31 lb. (14.06 kg) / 4-Unit Master Pack
- Zinc Bowl (W) ..... 7 lb. (3.18 kg) / Unit
  28 lb. (12.70 kg) / 4-Unit Master Pack

Materials of Construction

Body ..... Zinc

Bowls –
- (E) ..... Aluminum without Sight Gauge
- (W) ..... Zinc with Sight Gauge

Drain –
- Manual Twist & Overnight ..... Brass
- Housing "R" ..... Acetal
- Housing "Q" ..... Bronze

Filter Elements –
- 40 Micron (Standard) ..... Polypropylene
- 5 Micron (Optional) ..... Polypropylene

Seals ..... Nitrile

Sight Gauge ..... Nylon

Parker Hannifin Corporation
Pneumatic Division
Richland, Michigan
www.wattsfluidair.com

F602 Filters – Hi-Flow

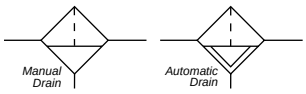

Features

- Excellent water removal efficiency
- For heavy duty applications with minimum pressure drop requirement
- Unique deflector plate that creates swirling of the air stream ensuring maximum water and dirt separation
- Large filter element surface guarantees low pressure drop and increased element life
- 40 micron filter element standard
- Metal bowl with sight gauge standard
- Twist drain as standard, optional auto drain
- Large bowl capacity
- Optional high capacity bowl(s) available
- High flow: 2 & 2-1/2" – 1200 SCFM§

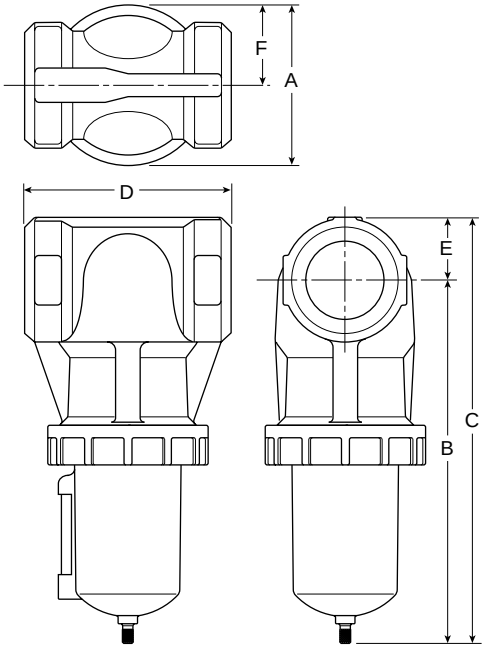

Port Size	NPT	
	Twist Drain	Automatic Pulse Drain
Metal Bowl / Sight Gauge - 16 oz.		
2"	**F602-16WJ**	**F602-16WJR**
2-1/2"	**F602-20WJ**	**F602-20WJR**
Metal Bowl without Sight Gauge - 32 oz.		
2"	**F602-16EJ**	**F602-16EJR**
2-1/2"	**F602-20EJ**	**F602-20EJR**

Standard part numbers shown bold.
For other models refer to ordering information below.

§ SCFM = Standard cubic feet per minute at 90 PSIG inlet and 5 PSIG pressure drop.

F602 Filter Dimensions					
A	B	C	D	E	F
F602-16W, F602-20W					
4.90 (124)	11.08 (281)	13.00 (330)	6.30 (160)	1.92 (48.7)	2.45 (62.2)
F602-16E, F602-20E					
4.90 (124)	14.31 (364)	16.23 (412)	6.30 (160)	1.92 (48.7)	2.45 (62.2)

inches (mm)

Ordering Information

F	602	—	16	W	J		/**

Port Threads
- **— NPT**
- G BSPP

Port Size
- **16 2 Inch**
- **20 2-1/2 Inch**

Bowl
- **E 32 oz. Large Capacity Metal without Sight Gauge**
- **W 16 oz. Metal with Sight Gauge**

Element
- **J 40 Micron**

Drains and Options
- **Blank Manual Twist Drain**
- Q External Heavy Duty Auto Drain
- **R Internal Auto Drain**

Engineering Level
- * Will be Entered at Factory.

BOLD ITEMS ARE MOST POPULAR.

Parker Hannifin Corporation
Pneumatic Division
Richland, Michigan
www.wattsfluidair.com

Technical Information

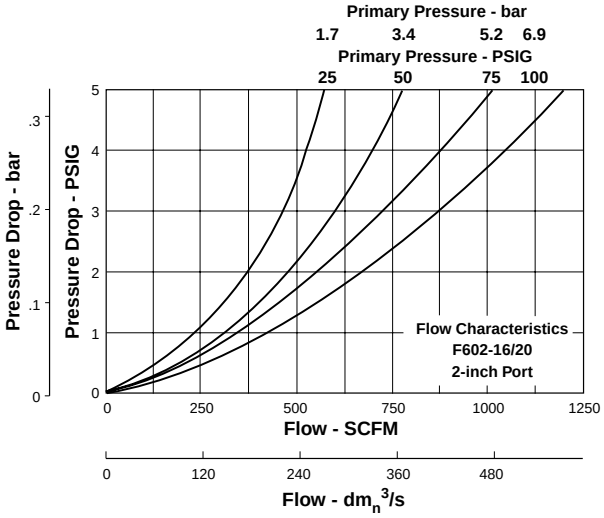

"Q" Option External Heavy Duty Auto Drain SA602D / SA603D
For heavy duty applications where the filter is being used to remove large volumes of liquid and/or particulate matter from the airstream, the external automatic drain ("Q" option) should be used.

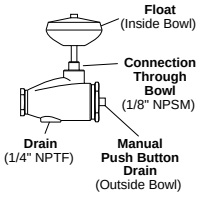

F602 Filter Kits & Accessories

Bowl Kits –
Aluminum (E) BK603B
Zinc with Sight Gauge (W) BK605WB

Drain Kits –
External Auto (E) SA603D
External Auto (W) SA602D
Internal Auto (All) SA602MD
Manual (All) SA600Y7-1
Semi-Automatic "Overnight" Drain SA602A7
(Drains automatically under zero pressure)

Filter Element Kits –
40 Micron (All) EK602B

Repair Kits –
Deflector, Baffle Assembly, and Retaining Rod (All) RK602C
External Auto Drain (All) RK602D
Internal Auto Drain (All) RK602MD
Metal Bowl Sight Gauge (W) RKB605WB

Specifications

Bowl Capacity –
Aluminum (E) ..... 32 Ounces
Zinc (W) ..... 16 Ounces

Port Threads ..... 2, 2-1/2 Inch

( ) = Bowl Type

Pressure & Temperature Ratings –
Aluminum Bowl (E) ..... 0 to 300 PSIG (0 to 20.4 bar)
40°F to 150°F (4.4°C to 65.6°C)
Zinc (W) ..... 0 to 250 PSIG (0 to 17.2 bar)
40°F to 150°F (4.4°C to 65.6°C)
With Internal Auto Drain (R) ..... 20 to 175 PSIG (1.4 to 11.9 bar)
40°F to 125°F (4.4°C to 52°C)
With External Auto Drain (Q) ..... 30 to 250 PSIG (0 to 17.2 bar)
40°F to 150°F (4.4°C to 65.6°C)

Weight –
Aluminum Bowl (E) ..... 10.3 lb. (4.67 kg) / Unit
11 lb. (4.99 kg) / 1-Unit Master Pack
Zinc Bowl (W) ..... 9.8 lb. (4.45 kg) / Unit
39 lb. (17.69 kg) / 4-Unit Master Pack

Materials of Construction

Body ..... Aluminum

Bowls –
(E) ..... Aluminum without Sight Gauge
(W) ..... Zinc with Sight Gauge

Drain –
Manual Twist & Overnight ..... Brass
Housing "R" ..... Acetal
Housing "Q" ..... Bronze

Filter Elements –
40 Micron (Standard) ..... Polypropylene

Seals ..... Buna N

Sight Gauge ..... Nylon

Parker Hannifin Corporation
Pneumatic Division
Richland, Michigan
www.wattsfluidair.com

35F, 43F Filters – Hi-Flow

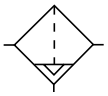

Auto Drain

Features

- Heavy-duty cast aluminum housings to withstand operating pressures up to 250 PSIG*
- Differential pressure indicator to eliminate the guesswork of element replacement
- Differential pressure gauge available, order separately, Kit DP3-01-000
- Unique drain mounting plate design offers a trouble-free method for interchanging and installing external drains
- High flow: 1-1/2" – 1280 SCFM§
  2" – 1400 SCFM§
  3" – 2900 SCFM§

* Without Differential Pressure Indicator – Max. supply pressure is 250 PSIG (20.7 bar).

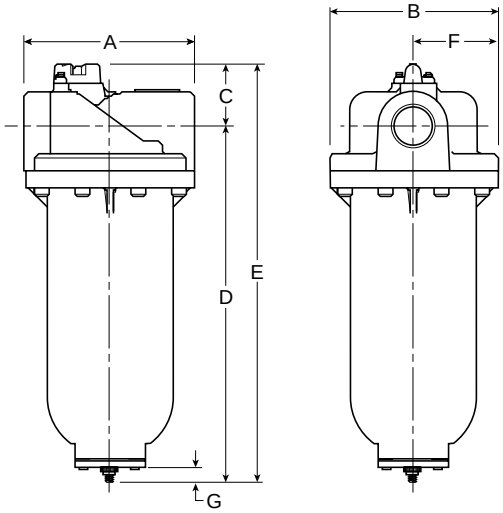

Series	Port Size	Element Type	Part Number (NPT) Automatic Drain
35F	1-1/2	5 micron	**35F77BAP**
	2	5 micron	**35F87BAP**
43F	3	5 micron	**43FN7BAP**

Standard part numbers shown bold.
For other models refer to ordering information below.

§ SCFM = Standard cubic feet per minute at 90 PSIG inlet and 5 PSIG pressure drop.

35F Filter Dimensions						
A	**B**	**C**	**D**	**E**	**F**	**G**
7.80 (198)	7.75 (197)	2.81 (71)	16.24 (412.5)	19.07 (484)	3.88 (98.6)	.55 (14)
43F Filter Dimensions						
A	**B**	**C**	**D**	**E**	**F**	**G**
8.94 (227)	8.88 (225.5)	3.48 (88)	25.96 (659.4)	29.44 (748)	4.44 (112.8)	.55 (14)

inches (mm)

Ordering Information

35F	7	7	B	A	P	

Port Size
- 35F
- 7 1-1/2 Inch
- 8 2 Inch
- 43F
- N 3 Inch

Bowl
- 7 Metal without Sight Gauge, Auto Float Drain

Element
- B 5 Micron

Engineering Level
- A

Options
- N Without Differential Pressure Indicator
- P* With Differential Pressure Indicator
- G** With Differential Pressure Gauge

Port Threads
- Blank NPT
- 1 BSPP
- 2 BSPT

* Max. pressure rating 150 PSIG.
** Gauge ships loose.

BOLD ITEMS ARE MOST POPULAR.

Parker Hannifin Corporation
Pneumatic Division
Richland, Michigan
www.wattsfluidair.com

Technical Information

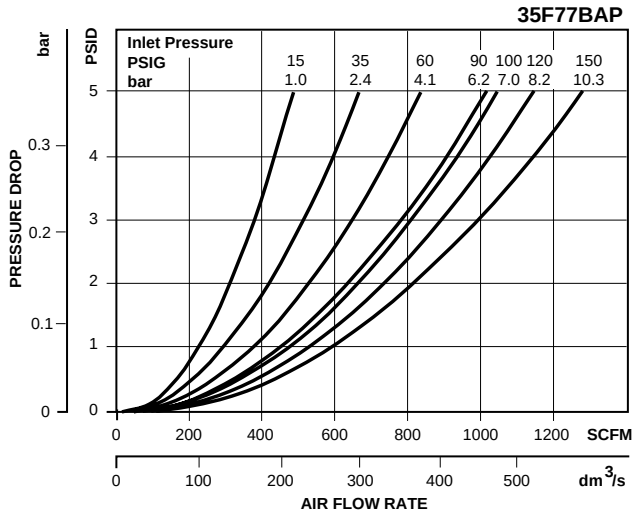

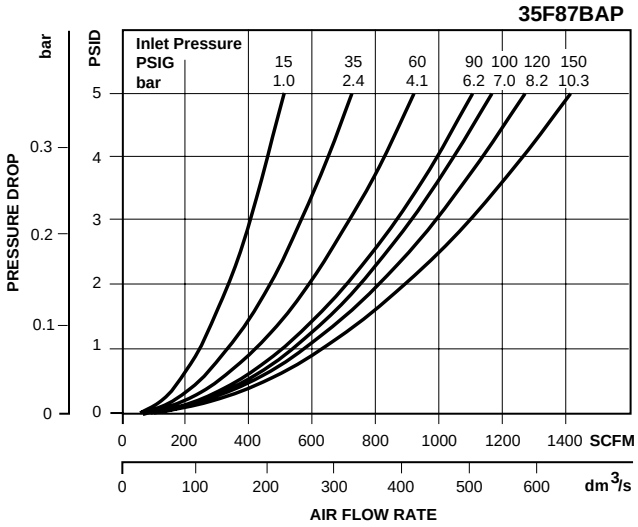

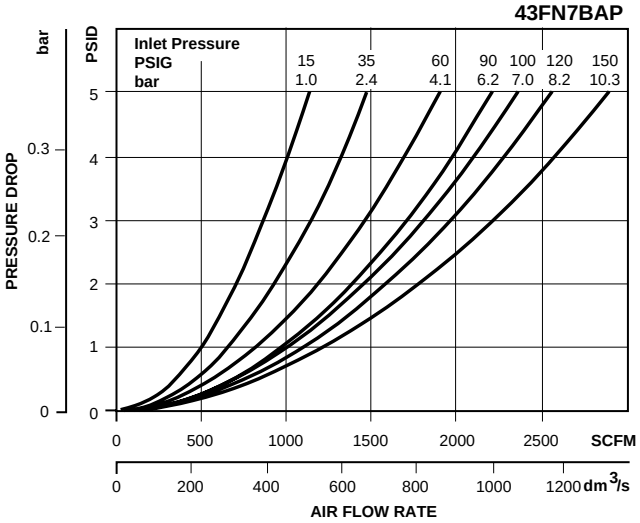

35F & 43F Filter Kits & Accessories

Differential Pressure Indicator Cap –
For pressures over 150 PSIG GRP-95-022

Differential Pressure Gauge DP3-01-000

Differential Pressure Indicator DP2-02-001

Drain, Automatic, Internal, Fluorocarbon –
1/8 NPT GRP-95-981

Drain Plate Kit –
1/2 NPT Tapped Drain Port GRP-95-393

Element –
35F, 5 Micron FRP-95-505
43F, 5 Micron FRP-95-508

Manual Drain Kit
with 1/2" Drain Plate GRP-95-392

Specifications

Maximum Supply Pressure –
without DPI and with Pressure Gauge ..... 250 PSIG (17.2 bar)*
with DPI ..... 150 PSIG (10.3 bar)

Operating Temperature ..... 32° to 150°F (0° to 65.5°C)

Port Size –
35F ..... 1-1/2, 2 Inch
43F ..... 3 Inch

Standard Filtration ..... 5 Micron

Weight –
35F ..... 19.3 lb. (8.7 kg)
43F ..... 32.8 lb. (14.9 kg)

* Without pressure indicator

Materials of Construction

Baffle ..... Plated Steel

Body ..... Aluminum

Bowls ..... Aluminum

Deflector ..... Plated Steel

Element Retainer ..... Plated Steel

Filter Element ..... Polyethylene

Seals ..... Fluorocarbon

Stud ..... Plated Steel

Parker Hannifin Corporation
Pneumatic Division
Richland, Michigan
www.wattsfluidair.com

10F Coalescing Filters – Miniature

Features

- Removes liquid aerosols and sub-micron particles
- Liquids gravitate to the bottom of the element and will not re-enter the airstream
- Oil free air for critical applications, such as air gauging and pneumatic instrumentation and controls
- Interchangeable twist and automatic pulse drains
- Grade 6 element, 99.97% DOP efficiency
- High flow:
  grade 6 element
  1/8" – 17 SCFM §
  1/4" – 20 SCFM §
  Grade 10 element
  1/8" – 19 SCFM §
  1/4" – 24 SCFM §

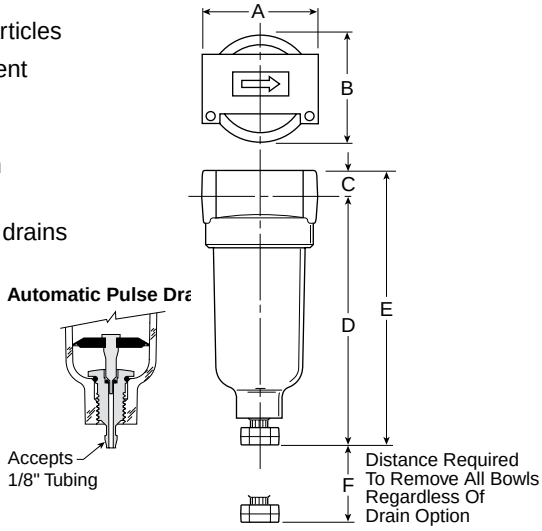

Port Size	NPT	
	Twist Drain	Automatic Pulse Drain
Poly Bowl ‡		
1/8"	**10F01E***	**10F05E***
1/4"	**10F11E***	**10F15E***
Metal Bowl without Sight Gauge		
1/8"	**10F03E***	**10F07E***
1/4"	**10F13E***	**10F17E***

Standard part numbers shown bold, with Grade 6 Elements (for Grade 10 Elements, replace "E" with "H" in the 6th position). For other models refer to ordering information below.

‡ For polycarbonate bowl see Caution on page inside cover.

§ SCFM = Standard cubic feet per minute at 90 PSIG inlet and 5 PSIG pressure drop.

10F Coalescing Filter Dimensions		
A 1.69 (43)	**B** 1.56 (39,6)	**C** .39 (10)
D 3.82 (97)	**D**† 3.67 (93)	**E** 4.21 (107)
E† 4.06 (103)	**F** 1.60 (41)	

Inches (mm)

† With Automatic Pulse Drain.

Ordering Information

10F	1	1	E	*	

Port Size
- **0 1/8 Inch**
- **1 1/4 Inch**

Bowl Options
- Polycarbonate Bowl
- **1 Twist Drain**
- **5 Automatic Pulse Drain**
- Metal Bowl
- **3 Twist Drain**
- **7 Automatic Pulse Drain**

Elements
- **E Grade 6**
- H Grade 10

Engineering Level
- * Will be Entered at Factory

Port Type
- **Blank NPT**
- 1 BSPP
- 2 BSPT

BOLD ITEMS ARE MOST POPULAR.

Parker Hannifin Corporation
Pneumatic Division
Richland, Michigan
www.wattsfluidair.com

Technical Information

Grade 6

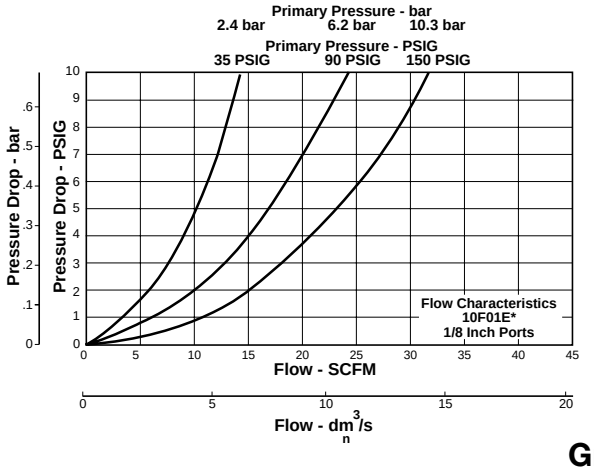

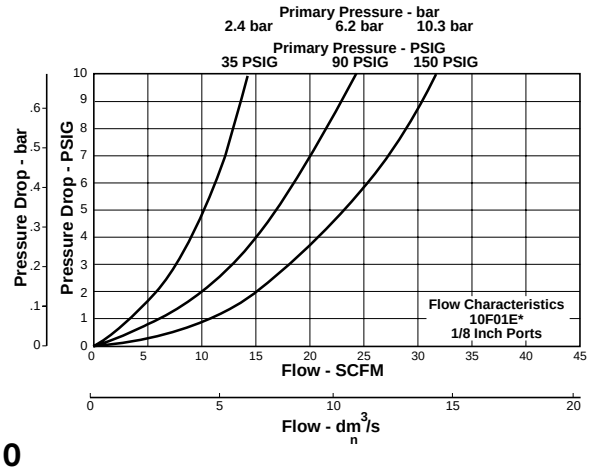

Grade 10

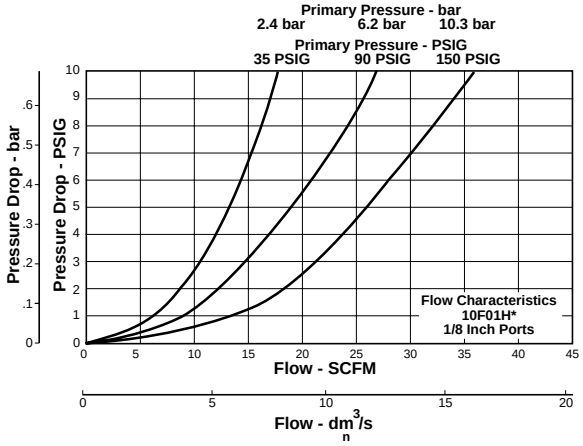

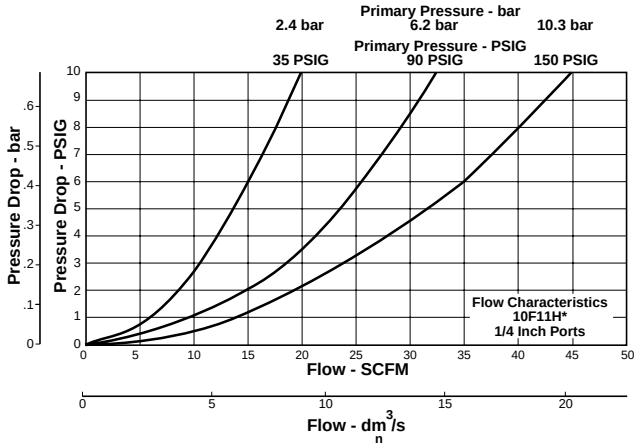

10F Coalescing Filter Kits & Accessories

Bowl Kits –
- Poly Bowl –
  - Automatic Pulse Drain PS408B
  - Twist Drain PS404
- Metal Bowl –
  - Automatic Pulse Drain PS451B
  - Twist Drain PS447B

Filter Element Kits –
- Grade 6 (Standard) PS446
- Grade 10 (Optional) PS456

Mounting Bracket Kit PS417B

Specifications

Automatic Pulse Drain Tube Barb ..... 1/8 Inch

Bowl Capacity ..... 1 Ounce

Operation –
- Normal Operating Pressure Drop ..... 2 PSIG
- Maximum Recommended Pressure Drop ..... 10 PSIG
- (Element should be replaced)

Port Threads ..... 1/8, 1/4 Inch

Pressure & Temperature Ratings –
- Polycarbonate Bowl – ..... 0 to 150 PSIG (0 to 10.3 bar)
  32°F to 125°F (0°C to 52°C)
- Metal Bowl – ..... 0 to 250 PSIG (0 to 17.2 bar)
  32°F to 175°F (0°C to 80°C)

Weight ..... 0.41 lb. (0.18 kg)

Materials of Construction

Body ..... Zinc

Bowls –
- Transparent ..... Polycarbonate
- Metal ..... Zinc Without Sight Gauge

Drains –
- Twist Drain –
  - Body & Stem ..... Plastic
  - Seals ..... Nitrile
- Automatic Pulse Drain –
  - Piston & Seals ..... Nitrile
  - Stem, Seat, Adaptor & Washers ..... Aluminum

Element Holder ..... Plastic

Filter Element .... Borosilicate & felt glass fibers 99.97% DOP efficiency
- Largest Aerosol Particle Passed (Grade 6) ..... 0.75 Micron
- Largest Solid Particle Passed (Grade 6) ..... 0.30 Micron

Seals ..... Nitrile

Media Specifications

Grade	D.O.P. Coalescing Efficiency 0.3 to 0.6 Micron Particles	Maximum Oil Carryover[1] PPM w/w	Pressure Drop (PSID)[2] @ Rated Flow		Particulate Micron Rating
			Media Dry	Media Wet With 10-20 wt. oil	
6	99.97%	0.008	1.0	2-3	0.01
10	95%	0.85	0.5	0.5	0.7

[1] Tested per BCAS 860900 at 40 ppm inlet.
[2] Add dry + wet for total pressure drop.
D.O.P. = Dioctylphthalate

Parker Hannifin Corporation
Pneumatic Division
Richland, Michigan
www.wattsfluidair.com

F501, F507 Coalescing Filters – Miniature

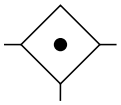

Features

- Removes liquid aerosols and sub-micron particles
- Liquids gravitate to the bottom of the element and will not re-enter the airstream
- Oil free air for critical applications, such as air gauging and pneumatic instrumentation and controls
- Interchangeable twist and automatic pulse drains
- Grade 6 element, 99.97% DOP efficiency
- High flow: Grade 6 element – 8 SCFM §
  Grade 10 element – 10 SCFM §

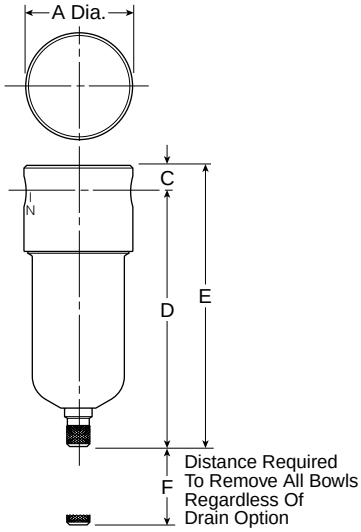

Port Size	NPT	
	Grade 6	Grade 10
Polycarbonate Bowl, Manual Twist Drain ‡		
1/8"	**F501-01AH**	**F507-01AO**
1/4"	**F501-02AH**	**F507-02AO**
Metal Bowl without Sight Gauge, Manual Twist Drain		
1/8"	**F501-01DH**	**F507-01DO**
1/4"	**F501-02DH**	**F507-02DO**

Bold Items are Most Popular.
For other models refer to ordering information below.

‡ For polycarbonate bowl see Caution on page inside cover.

§ SCFM = Standard cubic feet per minute at 100 PSIG inlet and1.0 PSIG Grade 6, .5 PSIG Grade 10 pressure drop.

F501 / F507 Coalescing Filter Dimensions		
A 1.56 (39.7)	**B** .038 (9.5)	**D** 3.78 (96)
D† 3.62 (92)	**E** 4.16 (105.6)	**E†** 4.00 (101.6)
F .75 (77)	**F†** .75 (77)	

Inches (mm)

† With Metal Bowl

Ordering Information

F	501 507	—	01	A	H		/**

Port Threads

—	**NPT**
G	BSPP

Port Size

01	**1/8 Inch**
02	**1/4 Inch**

Bowl

A	**Polycarbonate**
D	Metal

Elements

	F501
H	**Grade 6**
	F507
O	Grade 10

Drains and Options

Blank	**Manual Twist Drain**
S	Automatic Pulse Drain
U	Semi-Auto Drain
X33*	Polyurethane Bowl
X64	Fluorocarbon Seals
X67	With Mounting Bracket

* Add .65" to overall length.

Engineering Change Designator

Will be entered at factory.

BOLD ITEMS ARE MOST POPULAR.

Parker Hannifin Corporation
Pneumatic Division
Richland, Michigan
www.wattsfluidair.com

Technical Information

Coalescing Filter Flow Ratings in SCFM

F501 Flow measured at 100 PSIG inlet pressure and 1.0 PSIG pressure drop.

F507 Flow measured at 100 PSIG inlet pressure and 0.5 PSIG pressure drop.

For Inlet Pressures other than 100 PSIG

Inlet Pressure	F501-H	F507-O	Inlet Pressure	F501H	F507-O
10	1.7	2.2	160	12.2	15.2
20	2.4	3.0	170	12.9	16.1
30	3.1	3.9	180	13.6	17.0
40	3.8	4.8	190	14.3	178
50	4.5	5.6	200	15.0	18.7
60	5.2	6.5	210	15.7	19.6
70	5.9	7.4	220	16.4	20.5
80	6.6	8.3	230	17.1	21.3
90	7.3	9.1	240	17.8	22.2
100	8.0	10.0	250	18.5	23.1
110	8.7	10.9	260	19.2	23.9
120	9.4	11.7	270	19.9	24.8
130	10.1	12.6	280	20.6	25.7
140	10.8	13.5	290	21.3	26.6
150	11.5	14.4	300	21.9	27.4
Polycarbonate Bowl Limit 150 PSIG			**Mini Zinc Bowl Only Limit 300 PSIG**		

F501, F507 Filter Kits & Accessories

Bowl Kits –
- Polycarbonate (A) BK504Y
- Metal (D) BK505Y
- Polycarbonate (A) with Automatic Pulse Drain BK504SY
- Metal (D) with Automatic Pulse Drain BK505SY

Drain Kits –
- Manual Twist Drain SA600Y7-1
- Automatic Pulse Drain RK504SY
- Semi-Automatic "Overnight" Drain SA602A7
  (Drains automatically under zero pressure)

Filter Element Kits –
- Grade 6 ..... EKF501H
- Grade 10 ..... EKF507

Mounting Bracket Kit ..... Must be Ordered with Filter

Specifications

Bowl Capacity ..... 1 Ounce

Port Threads ..... 1/8, 1/4 Inch

Pressure & Temperature Ratings –

Polycarbonate Bowl ..... 0 to 150 PSIG (0 to 10.2 bar)
40°F to 125°F (4.4°C to 52°C)

Metal Bowl ..... 0 to 300 PSIG (0 to 20.4 bar)
40°F to 180°F (4.4°C to 82.2°C)

With Automatic Pulse Drain ..... 175 PSIG Max. Press. (11.9 bar)

( ) = BOWL TYPE

Weight

Polycarbonate Bowl ..... 0.3 lb. (0.14 kg) / Unit
7 lb. (3.18 kg) / 24-Unit Master Pack

Metal Bowl ..... 0.5 lb. (0.23 kg) / Unit
12 lb. (5.44 kg) / 24-Unit Master Pack

Materials of Construction

Body ..... Aluminum

Bowls ..... Polycarbonate
Metal (Zinc)

Drains ..... Brass

Filter Elements ..... Borosilicate Fibers & Felt

End Caps ..... Urethane

Seals ..... Nitrile

Media Specifications

Grade	D.O.P. Coalescing Efficiency 0.3 to 0.6 Micron Particles	Maximum Oil Carryover[1] PPM w/w	Pressure Drop (PSID)[2] @ Rated Flow		Particulate Micron Rating
			Media Dry	Media Wet With 10-20 wt. oil	
6	99.97%	0.008	1.0	2-3	0.01
10	95%	0.85	0.5	0.5	0.7

[1] Tested per BCAS 860900 at 40 ppm inlet.
[2] Add dry + wet for total pressure drop.
D.O.P. = Dioctylphthalate

Parker Hannifin Corporation
Pneumatic Division
Richland, Michigan
www.wattsfluidair.com

F701 Coalescing Filters – Compact

Features

- Removes liquid aerosols and sub-micron particles
- Liquids gravitate to the bottom of the element and will not re-enter the airstream
- Oil free air for critical applications, such as air gauging and pneumatic instrumentation and controls
- Interchangeable twist and automatic float drains
- Differential pressure indicator standard
- Shown with recommended metal bowl guard
- High flow: Grade 6 element 1/4" – 45 SCFM§, 3/8" – 48 SCFM§, 1/2" – 65 SCFM§; Grade 10 element 1/4" – 60 SCFM§, 3/8" – 72 SCFM§, 1/2" – 95 SCFM§

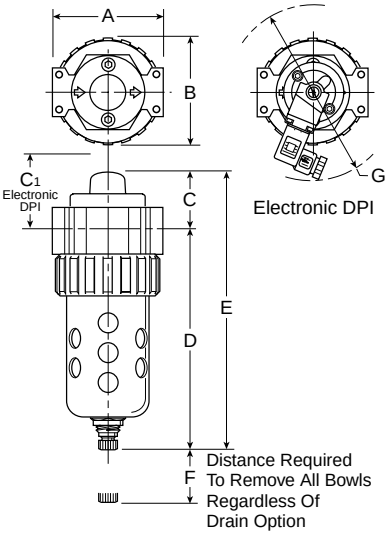

Port Size	NPT	
	Twist Drain	Automatic Float Drain
Poly Bowl ‡ / Metal Guard		
1/4"	**F701-022E***	**F701-026E***
3/8"	**F701-032E***	**F701-036E***
1/2"	**F701-042E***	**F701-046E***
Metal Bowl / Sight Gauge		
1/4"	**F701-024E***	**F701-028E***
3/8"	**F701-034E***	**F701-038E***
1/2"	**F701-044E***	**F701-048E***

Standard part numbers shown bold, with Grade 6 Elements (for Grade 10 Elements, replace "E" with "H" in the 6th position). For other models refer to ordering information below.

‡ For polycarbonate bowl see Caution on inside cover.

§ SCFM = Standard cubic feet per minute at 90 PSIG inlet and 5 PSIG pressure drop.

F701 Coalescing Filter Dimensions			
A 2.81 (71)	**B** 2.74 (70)	**C** 1.46 (37)	**C1** 1.81 (46)
D 5.69 (145)	**D†** 5.74 (146)	**E** 7.15 (182)	**E†** 7.20 (183)
F 2.25 (57)	**G Dia.** 4.50 (114)		

Inches (mm)

† With Automatic Float Drain

Ordering Information

F701	—	02	2	E	*	

Port Threads
- **— NPT**
- G* BSPP

* 1/4 & 3/8 inch meet ISO 1179-1 Standard.

Port Size
- **02 1/4 Inch**
- **03 3/8 Inch**
- **04 1/2 Inch**

Bowl Options

Polycarbonate Bowl
- **2 Metal Bowl Guard / Twist Drain**
- **6 Metal Bowl Guard / Auto Float Drain**

Metal Bowl
- 3 Twist Drain
- **4 Sight Gauge / Twist Drain**
- 7 Auto Float Drain
- **8 Sight Gauge / Auto Float Drain**

Element
- **E Grade 6 (.01 Micron)**
- H Grade 10 (1.0 Micron)

Engineering Level
- * Will be Entered at Factory.

Options
- **Blank With Differential Pressure Indicator**
- N Without Differential Pressure Indicator

BOLD ITEMS ARE MOST POPULAR.

Parker Hannifin Corporation
Pneumatic Division
Richland, Michigan
www.wattsfluidair.com

Technical Information

Grade 6

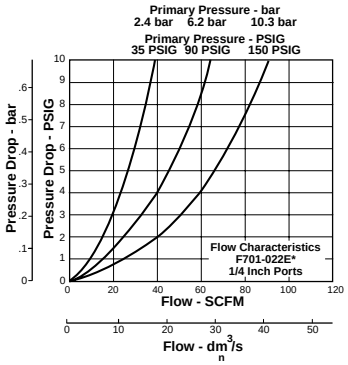

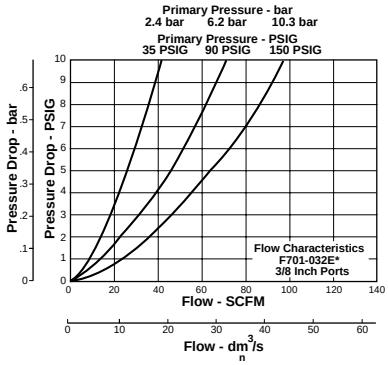

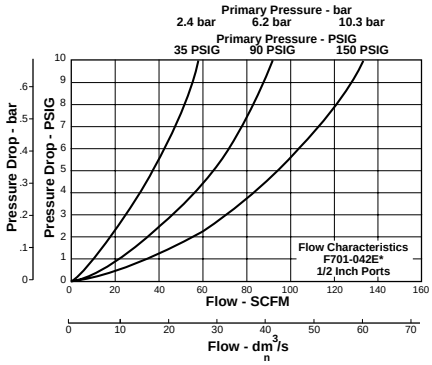

Grade 10

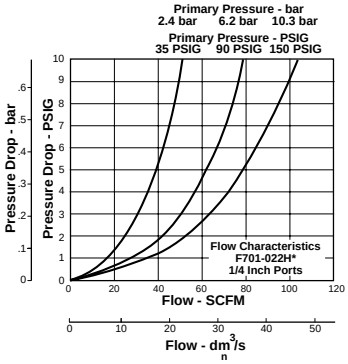

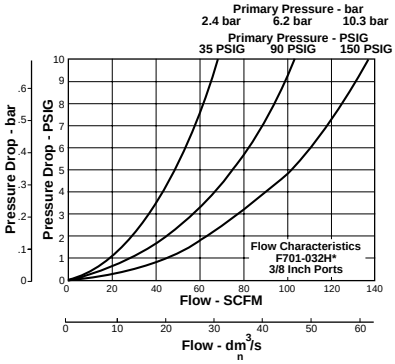

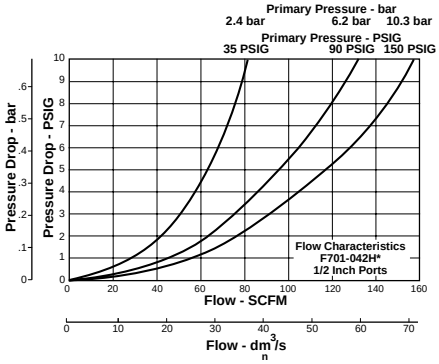

F701 Coalescing Filter Kits & Accessories

Bowl Guard Kit PS705

Bowl Kits –

Poly Bowl – Automatic Float Drain PS722
Twist Drain PS732

Metal Bowl – Automatic Float Drain PS726
Twist Drain PS734
Sight Gauge / Automatic Float Drain PS723
Sight Gauge / Twist Drain PS735

1/4, 3/8, 1/2 Inch (W) (Old F701) BK605WA
1/4, 3/8, 1/2 Inch (E) (Old F701) BK603A

DPI Replacement Kit PS781

Differential Pressure Pop Up Indicator Repair Kit RK701P
(only works with originally equipped 701 units)

Differential Pressure Gauge DP276-P
(only works on units without pop-up indicator)

Drain Kits –

Automatic Float Drain PS506
Twist Drain PS512
Internal Automatic Drain - High Pressure (T) (Old F701) SA702MD
Manual Twist Drain (Old F701) SA600Y7-1

Filter Element Kits –

Grade 6 (Standard) PS724
1/4, 3/8, 1/2 Inch (W) (Old F701) F701-C3-0771
1/4, 3/8, 1/2 Inch (E) (Old F701) F701-C3-0772
Grade 10 (Optional) PS730
1/4, 3/8, 1/2 Inch (W) (Old F701) F701-C7-0771
1/4, 3/8, 1/2 Inch (E) (Old F701) F701-C7-0772

Mounting Bracket Kit PS743
1/4, 3/8, 1/2 (Mounts to Filter Head) (Old F701) SAF602-0572

Sight Gauge Kit PS914

Specifications

Bowl Capacity ..... 4.4 Ounces

Sump Capacity ..... 1.75 Ounces

Operation – Normal Operating Pressure Drop ..... 2 PSIG
Maximum Recommended Pressure Drop ..... 10 PSIG
(Element should be replaced)
Minimum Recommended Flow –
20% Nominal Rating of Element

Port Threads ..... 1/4, 3/8, 1/2 Inch

Pressure & Temperature Ratings –

Without Differential Pressure Indicator:
Polycarbonate Bowl – 0 to 150 PSIG (0 to 10.3 bar)
32°F to 125°F (0°C to 52°C)
Metal Bowl – 0 to 250 PSIG (0 to 17.2 bar)
32°F to 175°F (0°C to 80°C)
With Differential Pressure Indicator: 0 to 150 PSIG (0 to 10.3 bar)
32°F to 125°F (0°C to 52°C)
Automatic Float Drain – 15 to 250 PSIG (1.0 to 17.2 bar)

Weight ..... 1.5 lb (0.7 kg)

Materials of Construction

Body ..... Zinc

Bowls ..... Transparent Polycarbonate
Metal (Zinc) With or Without Sight Gauge

Bowl Guard ..... Steel

Collar ..... Plastic

Drains – Twist Drain – Body & Nut ..... Plastic
Automatic Float Drain –..... Housing, Float Plastic
Seals ..... Nitrile
Springs, Push Rod ..... Stainless Steel

Filter Element –

Borosilicate & Felt Glass Fibers 99.97% DOP Efficiency
Largest Aerosol Particle Passed (Grade 6) ..... 0.01 Micron
Largest Solid Particle Passed (Grade 6) ..... 0.30 Micron

Seals ..... Nitrile

Sight Gauge ..... Nylon

Parker Hannifin Corporation
Pneumatic Division
Richland, Michigan
www.wattsfluidair.com

F701 Coalescing Filters – Standard

Features

- Removes liquid aerosols and sub-micron particles
- Liquids gravitate to the bottom of the element and will not re-enter the airstream
- Oil free air for critical applications, such as air gauging and pneumatic instrumentation and controls
- Interchangeable twist and automatic float drains
- Differential pressure indicator standard
- Shown with recommended metal bowl guard
- High flow: Grade 6 element 3/4" – 80 SCFM§ Grade 10 element 3/4" – 160 SCFM§

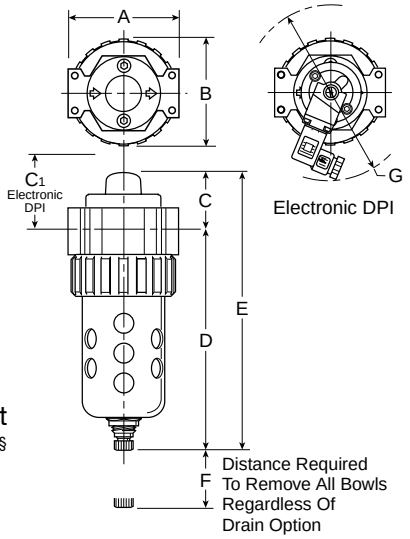

Port Size	NPT	
	Twist Drain	Automatic Float Drain
Poly Bowl ‡ / Metal Guard		
3/4"	**F701-062E***	**F701-066E***
Metal Bowl / Sight Gauge		
3/4"	**F701-064E***	**F701-068E***

Standard part numbers shown bold, with Grade 6 Elements (for Grade 10 Elements, replace "E" with "H" in the 6th position).
For other models refer to ordering information below.

‡ For polycarbonate bowl see Caution on inside cover.

§ SCFM = Standard cubic feet per minute at 90 PSIG inlet and 5 PSIG pressure drop.

F701 Coalescing Filter Dimensions			
A 3.24 (82)	**B** 3.25 (83)	**C** 1.63 (41)	**C1** 2.00 (51)
D 6.97 (177)	**D†** 7.00 (178)	**E** 8.60 (218)	**E†** 8.63 (219)
F 2.75 (70)	**G Dia.** 4.50 (114)		

Inches (mm)

† With Automatic Float Drain

Ordering Information

F701	—	06	2	E	*	

Port Threads
- **— NPT**
- G BSPP

Port Size
- **06 3/4 Inch**

Bowl Options

Polycarbonate Bowl
- **2 Metal Bowl Guard / Twist Drain**
- **6 Metal Bowl Guard / Auto Float Drain**

Metal Bowl
- 3 Twist Drain
- **4 Sight Gauge / Twist Drain**
- 7 Auto Float Drain
- **8 Sight Gauge / Auto Float Drain**

Element
- **E Grade 6 (.01 Micron)**
- H Grade 10 (1.0 Micron)

Engineering Level
- * Will be Entered at Factory.

Options
- **Blank With Differential Pressure Indicator**
- N Without Differential Pressure Indicator

BOLD ITEMS ARE MOST POPULAR.

Parker Hannifin Corporation
Pneumatic Division
Richland, Michigan
www.wattsfluidair.com

Technical Information

Grade 6

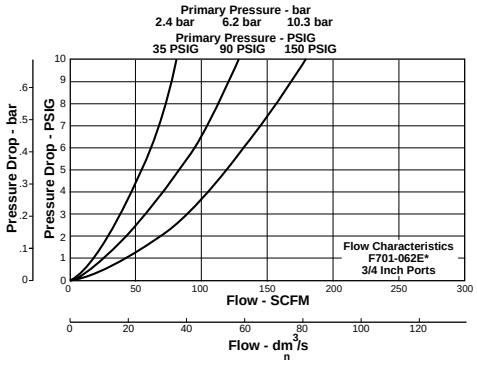

Grade 10

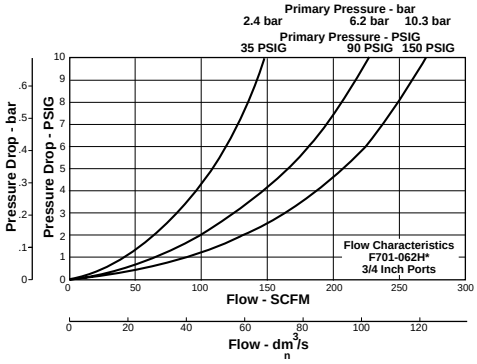

F701 Coalescing Filter Kits & Accessories

Bowl Guard Kit PS805

Bowl Kits –
Poly Bowl – Automatic Float Drain PS822
Twist Drain PS832
Metal Bowl – Automatic Float Drain PS826
Twist Drain PS834
Sight Gauge / Automatic Float Drain PS823
Sight Gauge / Twist Drain PS835

DPI Replacement Kit PS781

Drain Kits –
Automatic Float Drain PS506
Twist Drain PS512
Manual Twist Drain SA600Y7-1

Filter Element Kits –
Grade 6 (Standard) PS824
Grade 10 (Optional) PS830

Mounting Bracket Kit PS843

Sight Gauge Kit PS914

Specifications

Bowl Capacity ..... 7.2 Ounces

Sump Capacity ..... 2.8 Ounces

Operation – Normal Operating Pressure Drop ..... 2 PSIG
Maximum Recommended Pressure Drop ..... 10 PSIG
(Element should be replaced)
Minimum Recommended Flow –
20% Nominal Rating of Element

Port Threads ..... 1/2 & 3/4 Inch

Pressure & Temperature Ratings –
Without Differential Pressure Indicator:
Polycarbonate Bowl – 0 to 150 PSIG (0 to 10.3 bar)
32°F to 125°F (0°C to 52°C)
Metal Bowl – 0 to 250 PSIG (0 to 17.2 bar)
32°F to 175°F (0°C to 80°C)
With Differential Pressure Indicator: 0 to 150 PSIG (0 to 10.3 bar)
32°F to 125°F (0°C to 52°C)
Automatic Float Drain – 15 to 250 PSIG (1.0 to 17.2 bar)

Weight ..... 2.4 lb. (1.1 kg)

Materials of Construction

Body ..... Zinc

Bowls ..... Transparent Polycarbonate
Metal (Zinc) With or Without Sight Gauge

Bowl Guard ..... Steel

Collar ..... Plastic or Metal

Drains – Twist Drain – Body & Nut ..... Plastic
Automatic Float Drain – ..... Housing, Float Plastic
Seals ..... Nitrile
Springs, Push Rod ..... Stainless Steel

Filter Element –
Borosilicate & Felt Glass Fibers 99.97% DOP Efficiency
Largest Aerosol Particle Passed (Grade 6) ..... 0.01 Micron
Largest Solid Particle Passed (Grade 6) ..... 0.30 Micron

Seals ..... Nitrile

Sight Gauge ..... Nylon

Parker Hannifin Corporation
Pneumatic Division
Richland, Michigan
www.wattsfluidair.com

F701 Coalescing Filters – Hi-Flow

Features

- Removes liquid aerosols and sub-micron particles
- Protects pneumatic systems from contamination that standard particulate filters will not catch
- Two different grade elements available
- Differential pressure pop-up indicator standard
- Differential pressure gauge optional
- High flow design

Note: All coalescing filters should be protected by a particulate filter (i.e., F602, or other) installed upstream.

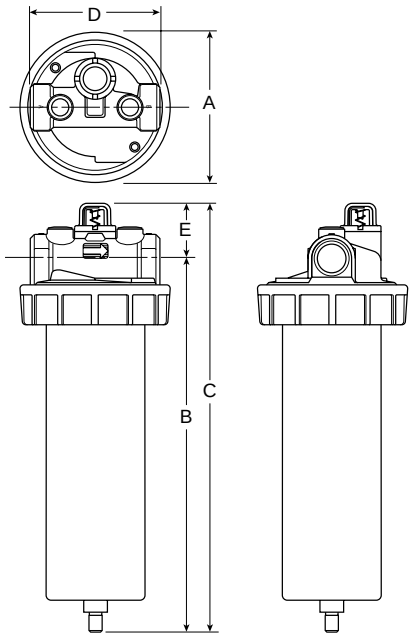

Port Size	Grade 6		Grade 10	
	Flow (SCFM)*	Part Number	Flow (SCFM)*	Part Number
3/4"	95	**F701-06E3P**	158	**F701-06E7P**
3/4"	170	**F701-06L3P**	285	**F701-06L7P**
1"	95	**F701-08E3P**	158	**F701-08E7P**
1"	170	**F701-08L3P**	285	**F701-08L7P**

* Dry media flow. For wet media info see table to right

F701 Coalescing Filter Dimensions						
Port Size	Bowl Capacity	A	B	C	D	E
3/4 & 1 Inch (E)	32 oz.	4.95 (126)	11.77 (299)	13 (330)	4.00 (101)	1.23 (31)
3/4 &1 Inch (L)	100 oz.	4.95 (126)	21.39 (543)	22.63 (575)	4.00 (101)	1.23 (31)

"G" Differential Pressure Gauge add 2.00(50.8) to C & E.
"Q" External Auto Drain add 1.70 (43.1) to B & C.

inches (mm)

Ordering Information

F701	—	06	E	3	P		/**

Port Threads
- **— NPT**
- G BSPP

Port Size
- 06 3/4 Inch
- 08 1 Inch

Bowl
- **E Metal without Sight Gauge**
- **L Metal without Sight Gauge 100 oz.**

Element
- **3 Grade 6**
- **7 Grade 10**

Element Service Indicator
- Blank None
- **P Pop-up Style**
- G Differential Pressure Gauge

Bowl Drains
- **Blank Manual Twist Drain**
- T Internal Automatic Drain
- Q External Auto Drain

Engineering Level
- * Will be Entered at Factory

BOLD ITEMS ARE MOST POPULAR.

Parker Hannifin Corporation
Pneumatic Division
Richland, Michigan
www.wattsfluidair.com

Element Selection

Element Grade		Applications
6	General air coalescing applications when total removal of liquid aerosols and suspended fines is required in all pressure ranges. Protection of air dryers, air gauging, air logic, modulating systems, critical air conveying, most breathing air systems, etc.	
10	Precoalescer or prefilter for Grade 6 to remove gross amounts of water and oil, or tenacious aerosols which are difficult to remove. Upgrading existing particulate equipment to coalescing without increase in pressure drop.	

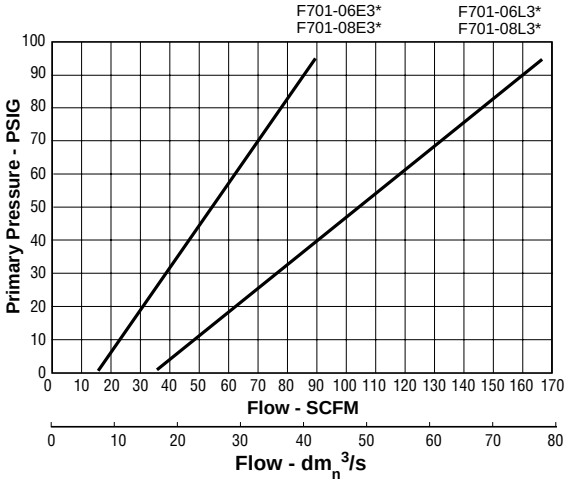

Media Specifications

Grade	D.O.P. Coalescing Efficiency 0.3 to 0.6 Micron Particles	Maximum Oil Carryover[1] PPM w/w	Pressure Drop (PSID)[2] @ Rated Flow		Flow: SCFM @ 1 PSID Operating Pressure 100 PSIG
			Media Dry	Media Wet With 10-20 wt. oil	
6	99.97%	0.008	1.0	2-3	3.5 SCFM
10	95%	0.85	0.5	0.5	5.3 SCFM

[1] Tested per BCAS 860900 at 40 ppm inlet.
[2] Add dry + wet for total pressure drop.
D.O.P. = Dioctylphthalate

F701 Filter Kits & Accessories

Mounting Brackets –
Port Size
3/4 Inch (Pair of Pipe Mounted Brackets) SA200AW57
1 Inch (Pair of Pipe Mounted Brackets) SA200CW57

Bowl Kits –
Port Size
3/4, 1 Inch (E) BK603B
3/4, 1 Inch (L) BK603C

Differential Pressure Pop Up Indicator Repair Kit RK701P
(only works with originally equipped units)

Differential Pressure Gauge DP276-P
(only works on units without pop-up indicator)

Drain Kits –
Internal Automatic Drain - High Pressure (T) SA702MD
Manual Twist Drain SA600Y7-1

Filter Element Kits –
Port Size - Grade 6
3/4, 1 Inch (E) F701-C3-0773
3/4, 1 Inch (L) F701-C3-0774

Port Size - Grade 10
3/4, 1 Inch (E) F701-C7-0773
3/4, 1 Inch (L) F701-C7-0774

Specifications

Operation –
Maximum Recommended Pressure Drop ..... 10 PSIG
(element should be replaced)
Normal Operating Pressure Drop (Dry) ..... 2 PSIG
Normal Operating Pressure Drop (Wet) ..... 5 PSIG

( ) = Bowl Type

Minimum Recommended Flow ..... 20% of Rated Flow

Maximum Pressure (Manual Drains) ..... 0 to 300 PSIG (0-20 bar)

Maximum Pressure Automatic Drains) –
"R" Drain ..... 175 PSIG (12 bar)
"T" Drain ..... 250 PSIG (17 bar)
"Q" Drain ..... 250 PSIG (17 bar)

Maximum Temperature ..... 32°F to 150°F (0°C to 65°C)
Maximum temperature with "T", "R", or "Q" Drains ... 125°F (52°C)

Weight –
3/4 & 1 Inch (E) 32 oz. ..... 5 lb.
3/4 & 1 Inch (L) 100 oz. ..... 8 lb.

Materials of Construction

Body & Flange Ring ..... Zinc

Bowl –
Metal Bowl (E) (L) ..... Aluminum

Drains –
Automatic Float Drain –
Housing "R", "T" ..... Acetal
Housing "Q" ..... Bronze
Manual Twist Drain ..... Brass

Seals & Float ..... Buna N

Springs ..... Stainless Steel

Elements (Media) ..... Borosilicate Fibers & Felt

Element End Caps ..... Urethane

Seals ..... Buna N

Parker Hannifin Corporation
Pneumatic Division
Richland, Michigan
www.wattsfluidair.com

35F, 43F Coalescing Filters – Hi-Flow

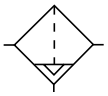

Auto Drain

Features

- Heavy-duty cast aluminum housings to withstand operating pressures up to 250 PSIG*
- Differential pressure indicator to eliminate the guesswork of element replacement
- Differential pressure gauge available, order separately, Kit DP3-01-000
- Unique drain mounting plate design offers a trouble-free method for interchanging and installing external drains
- High-flow filter elements: coalescing, 1 micron and 0.01 Micron
- High flow: 1-1/2" – 710 SCFM§
  2" – 710 SCFM§
  3" – 1770 SCFM§

* Without Differential Pressure Indicator – Max. supply pressure is 250 PSIG (20.7 bar).

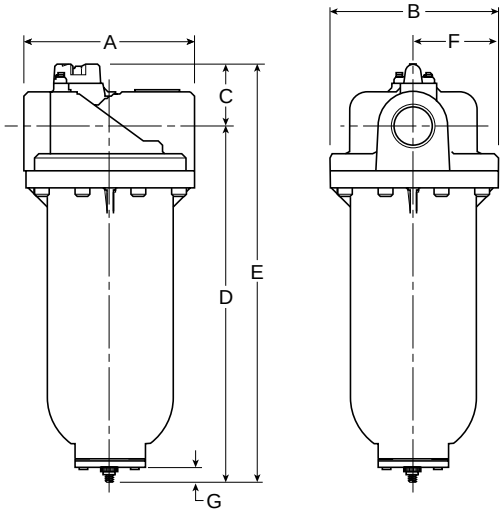

Series	Port size	Element type	Part number (NPT) Automatic drain
35F	1-1/2	0.01 micron	**35F77EAP**
	1-1/2	1.0 micron	**35F77HAP**
	1-1/2	Adsorber	**35F77ZAP**
	2	0.01 micron	**35F87EAP**
	2	1.0 micron	**35F87HAP**
	2	Adsorber	**35F87ZAP**
43F	3	0.01 micron	**43FN7EAP**
	3	1.0 micron	**43FN7HAP**
	3	Adsorber	**43FN7ZAP**

Standard part numbers shown bold.
For other models refer to ordering information below.

§ SCFM = Standard cubic feet per minute at 90 PSIG inlet and 5 PSIG pressure drop.

35F Coalescing Filter Dimensions						
A	B	C	D	E	F	G
7.80 (198)	7.76 (197)	2.83 (72)	16.24 (412.5)	19.07 (484)	3.88 (98.6)	.55 (14)
43F Coalescing Filter Dimensions						
A	B	C	D	E	F	G
8.94 (227)	8.88 (225.5)	3.48 (88)	25.96 (659.4)	29.44 (748)	4.44 (112.8)	.55 (14)

inches (mm)

Ordering Information

35F	7	7	H	A	P	

Port Size
- 35F
- 7 1-1/2 Inch
- 8 2 Inch
- 43F
- N 3 Inch

Bowl
- 7 Metal without Sight Gauge, Auto Float Drain

Element
- E .01 Micron
- H 1 Micron
- Z Adsorber

Engineering Level
- A

Options
- N Without Differential Pressure Indicator
- P* With Differential Pressure Indicator
- G** With Differential Pressure Gauge

* Max. pressure rating 150 PSIG.
** Gauge ships loose.

Port Threads
- Blank NPT
- 1 BSPP
- 2 BSPT

BOLD ITEMS ARE MOST POPULAR.

Parker Hannifin Corporation
Pneumatic Division
Richland, Michigan
www.wattsfluidair.com

Technical Information

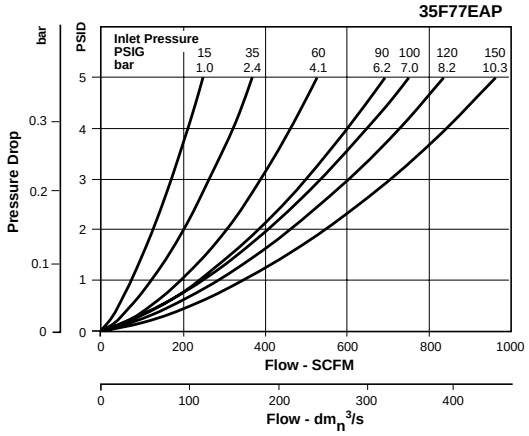

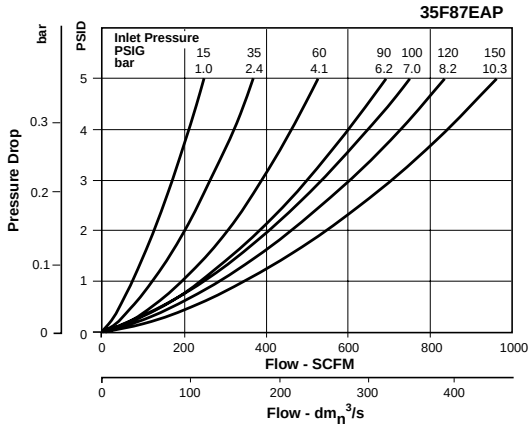

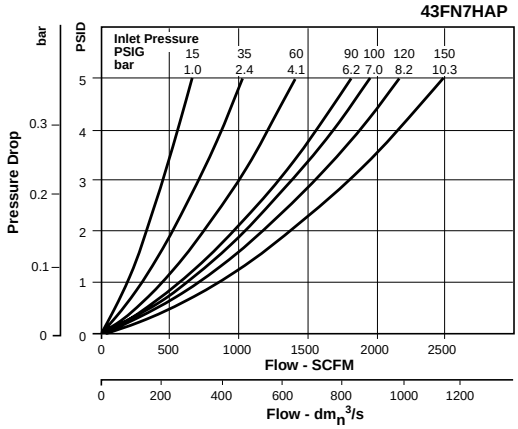

35F & 43F Coalescing Filter Kits & Accessories

Differential Pressure Indicator Cap –
For pressures over 150 PSIG GRP-95-022

Differential Pressure Gauge DP3-01-000

Differential Pressure Indicator DP2-02-001

Drain, Automatic, Internal, Fluorocarbon –
1/8 NPT GRP-95-981

Drain Plate Kit –
1/2 NPT Tapped Drain Port GRP-95-393

Element –
35F: 0.01 Micron MTP-95-502
35F: 1.0 Micron MSP-95-502
35F: Adsorber..... MXP-95-502
43F: 0.01 Micron MTP-95-562
43F: 1.0 Micron MSP-95-876
43F: Adsorber..... MXP-95-565

Manual Drain Kit
with 1/2" Drain Plate..... GRP-95-392

Specifications

Maximum Supply Pressure –
without DPI and with Pressure Gauge .....250 PSIG (17.2 bar)*
with DPI .....150 PSIG (10.3 bar)

Operating Temperature.....32° to 150°F (0° to 65.5°C)

Port Size –
35F .....1-1/2, 2 Inch
43F ..... 3 Inch

Standard Filtration* – Micron 1.0, 0.01
Adsorber .....Activated carbon

Weight –
35F ..... 19.3 lb. (8.7 kg
43F .....32.8 lb. (14.9 kg)

* Filtration temperature of 70°F (21°C) @100 PSIG (6.9 bar) with typical compressor lubricating oil and protected by 0.01 micron filter.

Materials of Construction

Body..... Aluminum

Bowls..... Aluminum

Filter Element – 0.01 & 1.0 Micron.....Borosilicate Cloth
Adsorber ..... Activated Carbon

Seals .....Fluorocarbon

Stud.....Plated Steel

Seals .....Fluorocarbon

Stud.....Plated Steel

Parker Hannifin Corporation
Pneumatic Division
Richland, Michigan
www.wattsfluidair.com

Bulk Liquid Separators – P3TF

P3TFA98WEAN

Features

- Tested in Accordance with ISO 8573.9.
- High Liquid Removal Efficiencies at All Flow Conditions.
- Low Pressure Losses for Low Operational Costs.
- Multiple Port Sizes for a Given Flow Rate Provides Increased Flexibility During Installation.
- Suitable for Variable Flow Compressors.
- Works with All Types of Compressor and Compressor Condensate.
- Low Maintenance.
- Lightweight Cast Aluminum Housing with 1/4" to 3" Ports.
- External Surface Epoxy Painted for Maximum Corrosion Resistance.

Applications

- Bulk Liquid Removal at Any Point in a Compressed Air System
- Protection of Refrigeration and Heatless Regenerative Desiccant Dryers
- Liquid Removal from Compressor Inter-coolers / After-coolers
- Liquid Separation Within Refrigeration Dryers
- Pre-Filtration

Ordering Information

P3TF	A	9	2WA	A	N

Engineering Level

A	**Current Engineering Level**

Thread Type

2	BSPT
9	**NPT**

Port Size / Flow

2WA	**1/4 Inch / 21 SCFM**
3WB	**3/8 Inch / 85 SCFM**
4WC	**1/2 Inch / 85 SCFM**
6WD	**3/4 Inch / 233 SCFM**
8WE	**1 Inch / 233 SCFM**
BWG	1-1/2 Inch / 742 SCFM
CWH	2 Inch / 742 SCFM
EWK	3 Inch / 1695 SCFM

Drain Type

A	**Auto Internal Float***

* Models are supplied with Auto Drain as Standard.

BOLD ITEMS ARE MOST POPULAR.

Parker Hannifin Corporation
Pneumatic Division
Richland, Michigan
www.wattsfluidair.com

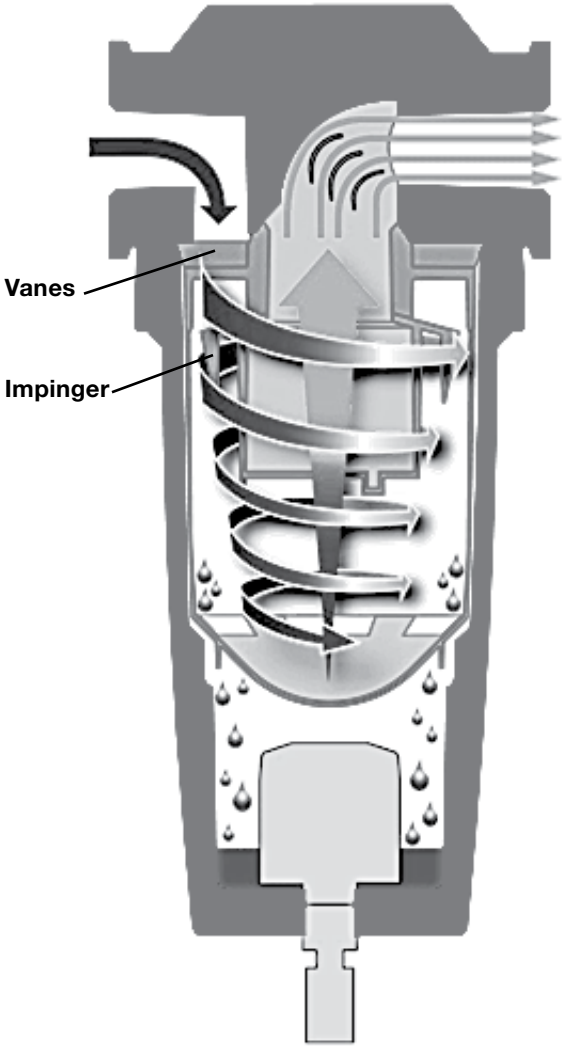

Operation

- Air Enters the Bulk Liquid Separator Inlet and Turns Into the Separator Module.
- The Inlet of the Separator Module Contains a Set of Fixed Vanes Which the Air Must Pass Through.
- The Vanes Force the Air to Spin Inside the Vessel.
- The Spinning Air is Then Forced to Change Direction as it Passes the Impinger.
- A Vortex is Created Which, Due to the Design of the Separator Module, Narrows and Intensifies as it Reaches the Lower Part of the Separator Module.
- Bulk Liquid is Removed From the Airstream Due to:
  - Directional Changes of the Airstream
  - Velocity Changes
  - Centrifugal Action of the Vortex
- As the Vortex Reaches the Bottom of the Module, Air is Forced Through The Center of the Vortex.
- Aerospace Turning Vanes, Located in the Outlet of the Separator Module, Turn an Inefficient Corner Into a Number of More Efficient Corners.
- Turning Vanes Reduce Turbulence, Minimizing Pressure Loss and Cost of Ownership.
- The Number of Vanes Required is Dependent Upon the Conduit Diameter.

Bulk Liquid Separators – P3TF

Specifications

Pressure Differential at Rated Flow..... 1.0 PSID (0.07 bar)

Model Number	Pipe Size	SCFM (L/s)	Maximum Operating Pressure psig (bar)	Operating Temperature	Weight Lb. (kg)
P3TFA92WAAN	1/4"	21 (10)	232 (16)	Maximum 176°F (80°C) Minimum 35°F (1.5°C)	0.9 (0.4)
P3TFA93WBAN	3/8"	85 (40)			2.2 (1.0)
P3TFA94WCAN	1/2"	85 (40)			2.2 (1.0)
P3TFA96WDAN	3/4"	233 (110)			4.8 (2.2)
P3TFA98WEAN	1	233 (110)			2.6 (5.7)
P3TFA9BWGAN	1-1/2"	742 (350)			5.3 (11.6)
P3TFA9CWHAN	2"	742 (350)			5.3 (11.6)
P3TFA9EWKAN	3"	1695 (800)			12.0 (26.4)

Stated flows are for operation at 102 psig (7 bar) with reference to 20°C, 1 bar (a), 0% relative water vapor pressure.

Flow

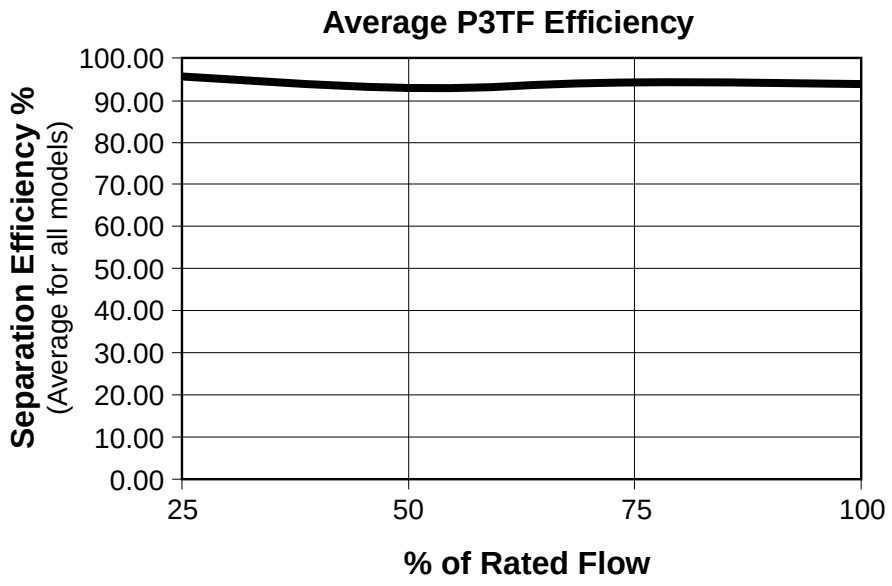

Parker Hannifin Corporation
Pneumatic Division
Richland, Michigan
www.wattsfluidair.com

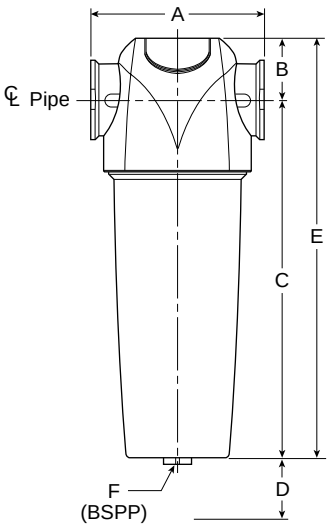

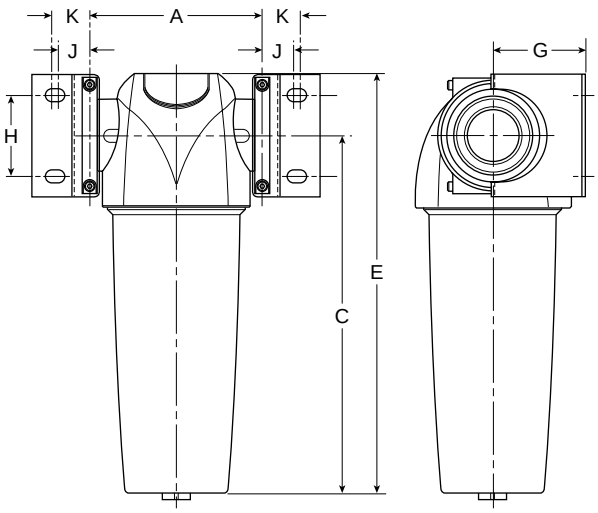

Dimensions

Model Number	Wall Mounting Bracket Kit	Pipe Size	A	B	C	D	E	BSPP F	G	H	J	K
P3TFA92WAAN	**P3TKA00MWA**	1/4"	3.00 (76)	1.12 (28.5)	6.02 (153)	1.58 (40)	7.15 (181.5)	1/2	2.05 (50)	1.18 (30)	0.71 (18)	0.96 (24.5)
P3TFA93WBAN	**P3TKA00MWB**	3/8"	3.83 (97.5)	1.34 (34)	7.91 (201)	1.97 (50)	9.25 (235)	1/2	2.36 (60)	1.57 (40)	0.81 (20.5)	1.00 (25.5)
P3TFA94WCAN	**P3TKA00MWB**	1/2"	3.83 (97.5)	1.34 (34)	7.91 (201)	1.97 (50)	9.25 (235)	1/2	2.36 (60)	1.57 (40)	0.81 (20.5)	1.00 (25.5)
P3TFA96WDAN	**P3TKA00MWD**	3/4"	5.07 (129)	1.67 (42.5)	13.09 (232.5)	2.76 (70)	10.80 (275)	1/2	2.68 (68)	2.36 (60)	0.91 (23)	1.10 (28)
P3TFA98WEAN	**P3TKA00MWD**	1	5.07 (129)	1.67 (42.5)	12.68 (322)	2.76 (70)	14.35 (364.5)	1/2	2.68 (68)	2.36 (60)	0.91 (23)	1.10 (28)
P3TFA9BWGAN	**P3TKA00MWF**	1-1/2"	6.70 (170)	1.97 (50)	18.68 (474.5)	3.94 (100)	20.64 (524.5)	1/2	3.62 (92)	3.31 (84)	1.26 (32)	1.54 (39)
P3TFA9CWHAN	**P3TKA00MWF**	2"	6.70 (170)	1.97 (50)	18.68 (474.5)	3.94 (100)	20.64 (524.5)	1/2	3.62 (92)	3.31 (84)	1.26 (32)	1.54 (39)
P3TFA9EWKAN	**P3TKA00MWJ**	3"	8.07 (205)	2.36 (60)	30.39 (772)	4.72 (120)	32.76 (832)	1/2	5.31 (135)	3.94 (100)	1.40 (35.5)	1.67 (42.5)

Inches (mm)

Bulk Liquid Separator Kits & Accessories

Drain Kit ..... EFI

Materials of Construction

Automatic Float Drain ..... Plastic
Housing / Bowl ..... Aluminum
Seals ..... Fluorocarbon

For External Drains, please reference WDV3-G Automatic Electrical Drain or ED Zero Loss Drain

Wall Mounting Bracket Kit

Mounting brackets provide additional support to filters installed in flexible piping systems or OEM equipment.

Parker Hannifin Corporation
Pneumatic Division
Richland, Michigan
www.wattsfluidair.com

DD Desiccant Dryers

Features

- These desiccant dryers are a convenient and cost effective means of ensuring your sensitive pneumatic applications are never exposed to damaging moisture
- Compact size for point-of-use applications
- Drying efficiency down to -40°F pressure dew point
- Easily and quickly serviced
- Sightglass in bowl to monitor desiccant
- Built-in particulate after filter prevents downstream dust
- No electricity needed
- Low pressure drop
- No purge air lost as with other dryer types

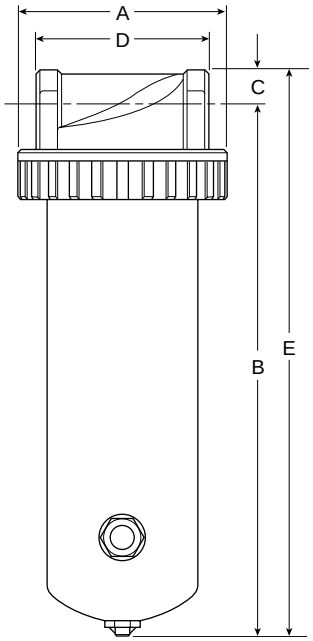

Applications

- Paint spraying
- Instrument air
- Laboratory instruments
- Control air systems
- Air blanketing

Port Size	15 SCFM	30 SCFM	60 SCFM
Desiccant Capacity[1]	2.5 lb[1]	5 lb.[1]	10 lb.[1]
1/4" [2]	**DD15-02**	N/A	N/A
3/8" [2]	**DD15-03**	N/A	N/A
1/2" [2]	**DD15-04**	**DD30-04**	**DD60-04**
3/4"	**DD15-06**	**DD30-06**	**DD60-06**
1"	N/A	**DD30-08**	**DD60-08**

Notes:
1. Desiccant must be ordered separately
2. These units supplied with reducer bushings

DD Desiccant Dryer Dimensions					
	A	**B**	**C**	**D***	**E**
DD15	4.94 (125)	12.69 (322)	.84 (21)	4.06 (103)	13.5 (343)
DD30	4.94 (125)	22.44 (570)	.84 (21)	4.06 (103)	23.25 (591)
DD60	4.94 (125)	29.44 (748)	.84 (21)	4.06 (103)	30.25 (768)

* Dimension does not include reducer bushings for 1/4", 3/8", 1/2" versions

inches (mm)

Performance

The rated flow capacities are nominal ratings provided for reference. These capacities are recommended for minimal pressure drop and average desiccant life. A supply of low flow / low humidity air will provide longer desiccant life: whereas, high flow / high humidity air will require more frequent desiccant changes. Installed in an application with intermittent flow, these desiccant dryers will typically dry air for weeks before the silica gel desiccant requires replacement or regeneration.

BOLD ITEMS ARE MOST POPULAR.

Parker Hannifin Corporation
Pneumatic Division
Richland, Michigan
www.wattsfluidair.com

As the wet compressed air enters through the inlet, the air travels down through the bed of desiccant which adsorb the water vapor and aerosols. The silica gel desiccant beads will reduce the humidity down to a -40°F pressure dew point. After the moisture has been removed, the dry air passes through a sintered bronze filter element (eliminating dust downstream), up the tube and out the outlet port.

As the desiccant becomes saturated with moisture, the dew point will begin to rise. This is evident when the blue silica gel desiccant beads in the sight glass change to pink, indicating the need for desiccant replacement. Simply remove the flange and bowl and replace with new desiccant or regenerate saturated desiccant by heating to 275°F.

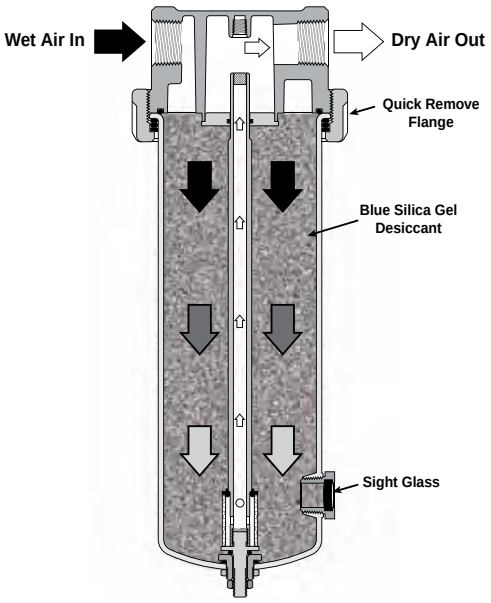

Installation Tips

- Always place a moisture separator/particulate filter (i.e., F602) to remove bulk moisture **and** a coalescing filter (i.e., F701) to remove oil upstream of desiccant dryer. Desiccant coated with oil will not adsorb oil.
- Automatic drains should be used in prefilters
- A spring ball check valve should be installed at the dryer inlet to maximize the life of the desiccant.

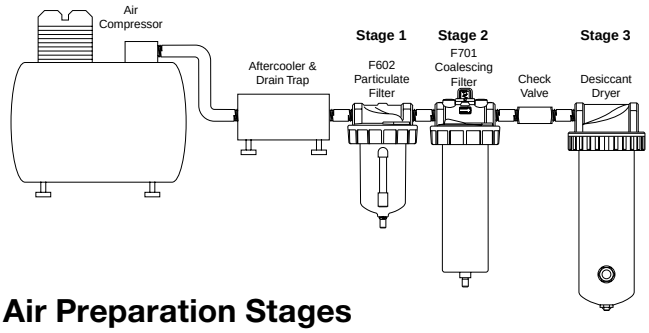

Air Preparation Stages

Stage	Type of Filter	Example	Function Served in Compressed Air System
1	Particulate / Moisture Removal Filters	F602	Removes bulk moisture & particulate matter [1]
2	Coalescing Filters	F701	Removes fine particulate matter, moisture droplets and aerosols, but NOT vapor[2]
3	Desiccant Dryer	DD15, DD30, DD60	Removes moisture vapor[3]

Notes:
1. Removes approx 75% of moisture
2. Removes approx 99.97% efficient in removing oil & water aerosols >.01 micron
3. Provides pressure dew point of -40° F with unsaturated desiccant

Desiccant Dryers Kits & Accessories

Desiccant - Environmentally Friendly Silica Gel 100% Indicating –
DD15 ..... DRP-14-447/003
DD30 ..... DRP-14-447/006
DD60 ..... DRP-14-447/012

Flow Tube Repair Kit (Tube, Filter Element(s), Adaptor)
DD15 ..... RKDD15-02-06
DD30 ..... RKDD30-03-08
DD60 ..... RKDD60-03-08

Mounting Brackets (Recommended for DD15 & DD30 only) –
1/4 Inch Pipe Size (Pair of Pipe Mounted Brackets) ... SA200YW57
1 Inch Pipe Size (Pair of Pipe Mounted Brackets)..... SA200CW57

Spring Check Valve for Inlet (250 PSIG max.) –
(Maximizes Life of Desiccant)
1/4 Inch NPT 003393001
3/8 Inch NPT 003393002
1/2 Inch NPT 003393003
3/4 Inch NPT 003393004

Specifications

Desiccant Capacity (Desiccant must be ordered separately) –
DD15 ..... 2.5 lb.
DD30 ..... 5 lb.
DD60 ..... 10 lb.

Filter Element Rating –
DD15, DD30 ..... 90 micron
DD60 ..... 40 micron

Pressure & Temperature Ratings –
Optimum working temperature ..... Below 100° F
Pressure Range ..... 0 to 300 PSIG
Temperature Range ..... 32°F to 180°F

Weight (Housing Only) –
DD15 (add 2.5 lb for weight full) ..... 8 lb.
DD30 (add 5 lb for weight full) ..... 13 lb.
DD60 (add 10 lb for weight full) ..... 20 lb.

Materials of Construction

Bowl –
DD15, DD30 ..... Aluminum
DD60 ..... Steel

Flow Tube ..... CPVC

Filter Elements ..... Sintered Bronze

Head & Flange Ring ..... Zinc

Other Hardware ..... Brass

Seals ..... Buna-N

Sight Glass ..... Glass & Steel

Parker Hannifin Corporation
Pneumatic Division
Richland, Michigan
www.wattsfluidair.com

Regulators

Regulation

An air regulator is a specialized control valve. It reduces upstream supply pressure level to a specified constant downstream pressure.

Pneumatic equipment that is operated at higher-than-recommended pressure wastes the energy to generate that pressure. It creates a potential safety hazard, and probably will wear out prematurely. Operating below specified pressure can cause the machine to fail to meet design performance specifications. Therefore, precise air pressure control is essential to efficient operation of air-powered equipment.

How to Select the Proper Regulator

While regulator bodies are generally constructed of die-cast metal, other external parts may be either metal or plastic. Remember that all-metal construction is best for tough applications, where abuse is likely to occur, but plastic construction is generally lower in cost. For normal industrial applications, either construction is suitable.

Inlet pressure rating and downstream controlled range, as well as flow capacity, must be determined before selecting a regulator. Port size should match piping size.

Required response time, relieving capability, and type of adjustment are other considerations. Highly sensitive, lightweight diaphragm sensors vs. the slower, but often more durable, piston sensors. Self-relieving vs. non-relieving regulators. T-Handles or knobs as the adjustment mechanism, or air pilot operated regulator which offer remote adjustment. Other choices to be made include gauge, panel mount and other special options.

Regulator Construction

Regulators are generally constructed using a die-cast metal body. Other external parts, such as the spring cage and bottom plug, may be either metal or plastic. All-metal construction offers more durability in tough applications where abuse is likely to occur, while the plastic construction offers lower cost. For normal industrial applications (temperature range of 40° to 120° F and supply pressure to 300 PSIG), either construction will serve well.

Lightweight diaphragm sensors offer quick response and high sensitivity to air pressure changes. Piston sensors are somewhat slower but may be more durable. Where downstream pressure requirements change rapidly enough to cause regular chatter, slower response may be an advantage.

If the self-relieving feature is not needed for an application, simpler non-relieving regulators are available.

For regulators with an adjustment spring, a -T-Handle or knob provides the external link to the spring on various models.

Pilot-operated regulators substitute air pressure in the chamber above the sensor to provide the reference force. Remote adjustment through a separate pilot regulator thus becomes possible, or the pilot signal can be fed back from a downstream location for precise control.

The balanced inner valve design exposes both sides of the inner valve to essentially the same pressure. This eliminates much of the effect that changes in inlet pressure might have on inner valve position and orifice opening.

Regulator Operation

In a typical regulator, an inner valve sets the size of an orifice which connects inlet port to outlet port. The sensing element, often a diaphragm or piston mechanically linked to the inner valve, reacts to downstream pressure and a reference force to position the inner valve. The reference force can be a spring, or an air pilot chamber.

The valve is normally open. High pressure air enters and flows through the orifice toward the outlet. Downstream pressure is connected through an aspirator tube to the bottom of the diaphragm. As downstream pressure increases, the diaphragm is forced upward, compressing the adjustment spring. When the diaphragm moves, the inner valve spring pushes the inner valve disc upward to throttle the orifice. If downstream pressure exhausts, the mechanical sequence reverses and the inner valve disc opens the orifice until the set pressure is reached again.

The arrangement of separate diaphragm chamber and aspirator tube accomplishes two purposes. First, the diaphragm is moved out of the potentially abrasive air stream. Second, and more important, if the downstream system calls for high flow, this flow generates a low pressure venturi effect at the end of the aspirator tube and into the diaphragm chamber. The diaphragm therefore reacts more quickly to open the orifice via the inner valve, thereby improving response time to high flow demands.

Some circuits may be subject to downstream-generated high pressure (from high temperatures or heavy vertical loads on cylinders, for example). This high pressure is reduced by a self-relieving feature built into the regulator. The inner valve stem normally blocks a relieving orifice in the center of the diaphragm. If excessive pressure lifts the diaphragm off the stem, air bleeds through the orifice and out the spring cage vent until the system returns to the set pressure.

Parker Hannifin Corporation
Pneumatic Division
Richland, Michigan
www.wattsfluidair.com

Regulators

Regulator Comparison Chart

		High Precision Regulators			Precision Regulator	Standard Regulator
	Examples →	**R210**	**R220**	**R230**	**R216**	**R10, R11, R119**
Repeatability / Sensitivity	Regulator's ability to return to a set pressure after inducing flow.	0.005 PSIG 1/8" Water Column	0.005 PSIG 1/8" Water Column	0.010 PSIG 1/4" Water Column	0.5 to 1.0 PSIG	2 to 4 PSIG
Reduced Pressure Variation	This refers to the regulator's ability to maintain a consistent output pressure when faced with variables such as time, cycling, temperature, supply pressure, flow, etc.	Best	Best	Better	Good	Average
Input Pressure	Unregulated air pressure going into the regulator	150 PSIG Max.	150 PSIG Max.	250 PSIG Max.	Varies	Varies
Effect of Supply Pressure Variation on Regulated Pressure	Reduced / set pressure variation when input pressure changes by 100 PSIG	0.020 PSIG	0.020 PSIG	0.100 PSIG	4 PSIG	Approx. 3 - 6 PSIG
Reduced Pressure Range	Reduced pressure ranges available	2-40 PSIG 2-120 PSIG	2-120 PSIG	0-2 PSIG 0-30 PSIG 0-60 PSIG 0-150 PSIG	Varies	Varies
Flow Capacity	Regulator's flow capacity	14 SCFM	14 SCFM	80 SCFM	Varies	Varies
Exhaust (Relief) Capacity	Regulator's exhaust/relief flow rating when backpressure is introduced from downstream	3 SCFM	11 SCFM	4 SCFM	Low	Low
Overpressure to Relieve ***Key in cylinder applications**	Regulator's sensitivity to relieve excess downstream pressure over the set pressure.	Best (0.005 PSIG)	Best (0.005 PSIG)	Better (0.010 PSIG)	Good (1 PSIG)	Average (5-10 PSIG)
Constant Bleed	Does the regulator constantly bleed air to the atmosphere to maintain accuracy?	Yes	Yes	Yes	Varies	No
Size Constraints	Overall size of regulator	4.5" H x 2.06" W	4.5" H x 2.06" W	5.5" H x 3" W	Varies	Varies
Mounting Constraints	Mounting options	Panel, Pipe, or Bracket	Panel, Pipe, or Bracket	Panel, Pipe, or Bracket	Panel, Pipe, Bracket, or Modular	Varies
Port Size	Inlet / Outlet port size	1/4"	1/4"	1/4" or 3/8"	Varies	Varies

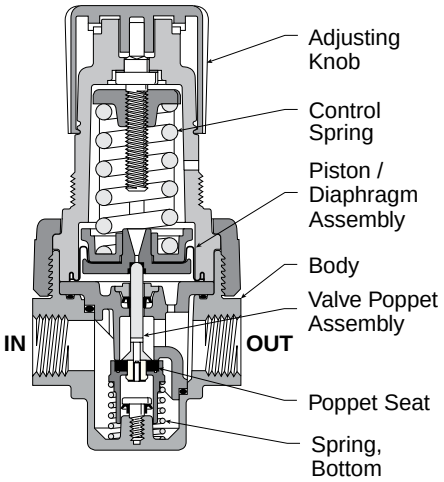

Compact Regulator

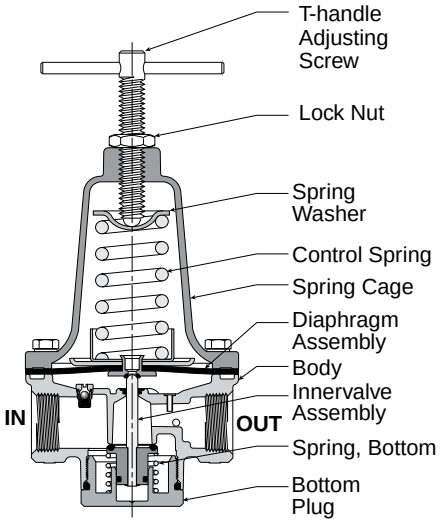

Standard Regulator

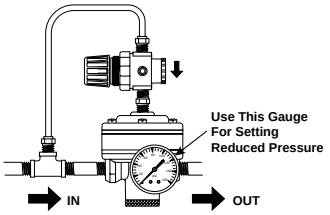

Pilot Regulator Application

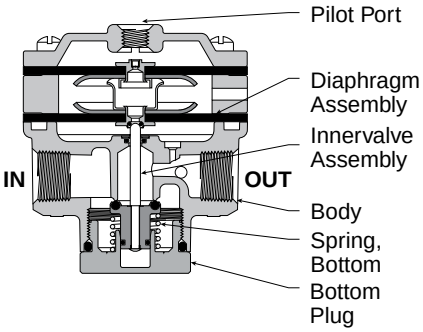

Pilot Operated Regulator

Parker Hannifin Corporation
Pneumatic Division
Richland, Michigan
www.wattsfluidair.com

14R Regulators – Miniature

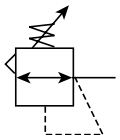

Features

- Unbalanced poppet standard
- Solid control piston with lip seal for extended life
- Non-rising adjusting knob
- Compact, 2.88 Inch (73.2mm) high by 1.65 Inch (42mm) wide
- Easily serviced
- High flow: 1/8" – 13 SCFM§
  1/4" – 15 SCFM§

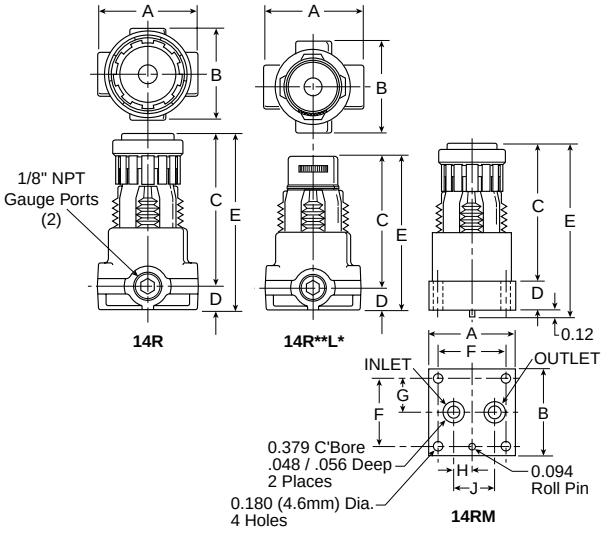

Port Size	NPT
Without Gauge	
1/8"	**14R013F***
1/4"	**14R113F***
With Gauge	
1/8"	**14R018F***
1/4"	**14R118F***

Bold Items are Most Popular.
For other models refer to ordering information below.

NOTE: 1.218 Dia. (31mm) hole required for panel mounting.

§ SCFM = Standard cubic feet per minute at 100 PSIG inlet, 90 PSIG no flow secondary setting and 10 PSIG pressure drop.

14R Regulator Dimensions					
14R	**A** 1.65 (42)	**B** 1.56 (40)	**C** 2.50 (63,5)	**D** .38 (10)	**E** 2.88 (73)
14RL***	**A** 1.65 (42)	**B** 1.56 (40)	**C** 2.28 (57,9)	**D** .38 (10)	**E** 2.68 (68)
14RM	**A** 1.50 (38)	**B** 1.50 (38)	**C** 2.36 (60)	**D** .50 (13)	**E** 2.98 (73)
	F 1.188 (30)	**G** .594 (15)	**H** .325 (8)	**J** .725 (18)	

Inches (mm)

Ordering Information

14R	1	13	F	*			

Port Size

- **0 1/8 Inch Pipe, 1/8 Inch Gauge Port**
- **1 1/4 Inch Pipe, 1/8 Inch Gauge Port**
- B 1/4 Inch Pipe, 1/4 Inch Gauge Port
- C 1/8 Inch Pipe, No Gauge Port
- M Manifold Mounting

Pressure Range

Without Gauge			
Yellow Knob		Black Knob	
10	30 PSIG	B0	30 PSIG
11	60 PSIG	B1	60 PSIG
12	15 PSIG	B2	15 PSIG
13	**125 PSIG**	B3	125 PSIG
With Gauge			
15	30 PSIG	B5	30 PSIG
16	60 PSIG	B6	60 PSIG
17	15 PSIG	B7	15 PSIG
18	125 PSIG	B8	125 PSIG

Relief

- **F Relieving**
- G Non-Relieving
- H Low Temp. Relieving
- J Low Temp. Non-Relieving

Engineering Level

- * Will be Entered at Factory

Port Type

- **Blank NPT**
- 1 BSPP
- 2 BSPT

Options

- **Blank No Options**
- L† Preset Non-Adjustable
- P† Preset Adjustable
- S† Pressure Limiter Max. Adjustable
- T Pressure Limiter Max. Non-Adjustable

† Inlet Pressure is 100 PSIG. For other pressures, contact factory.

Preset / Pressure Limited

- **Blank None**
- XXX* Preset Pressure
- XXX* Pressure Limited

* Available Preset / Pressure Limited Range, 10 to 90 PSIG in 5 PSIG increments. For higher pressures, contact factory.
(Example: 065 = 65 PSIG)

Spring Type by Preset / Limited Pressure:
For Preset / Limited Pressure 10 to 25 use 30 PSI Spring
For Preset / Limited Pressure 26 to 50 use 60 PSI Spring
For Preset / Limited Pressure 51 to 90 use 125 PSI Spring

BOLD ITEMS ARE MOST POPULAR.

Parker Hannifin Corporation
Pneumatic Division
Richland, Michigan
www.wattsfluidair.com

Technical Information

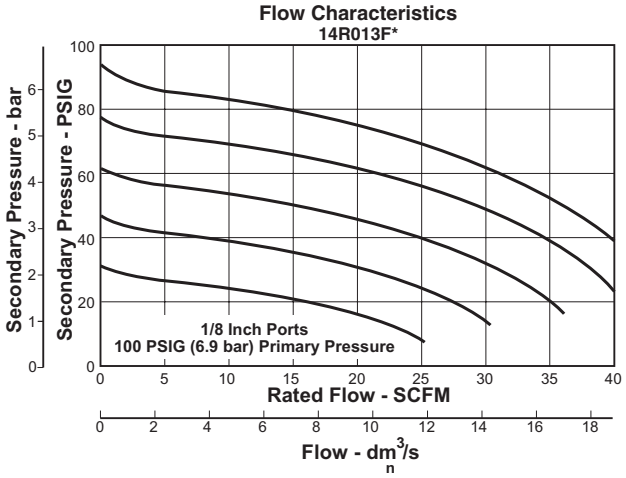

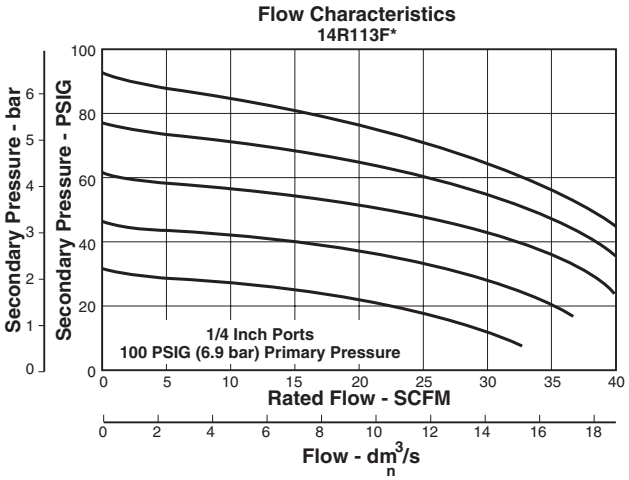

⚠ WARNING

Product rupture can cause serious injury.
Do not connect regulator to bottled gas.
Do not exceed maximum primary pressure rating.

⚠ CAUTION:

REGULATOR PRESSURE ADJUSTMENT – The working range of knob adjustment is designed to permit outlet pressures within their full range. Pressure adjustment beyond this range is also possible because the knob is not a limiting device. This is a common characteristic of most industrial regulators, and limiting devices may be obtained only by special design.
For best performance, regulated pressure should always be set by increasing the pressure up to the desired setting.

14R Regulator Kits & Accessories

Bonnet Assembly Kit L01369

Gauges – 30 PSIG, 1/8" NPT (0 to 2.1 bar) K4515N18030
60 PSIG, 1/8" NPT (0 to 4.1 bar) K4515N18060
160 PSIG, 1/8" NPT (0 to 11.0 bar) K4515N18160
60 PSIG, 1/4" NPT (0 to 4.1 bar) K4520N14060
160 PSIG, 1/4" NPT (0 to 11.0 bar) K4520N14160

Mounting Bracket Kit* (Includes Panel Mount Nut) PS417B

Panel Mount Nuts* – Plastic P78652
Metal P01531

Poppet / Piston Kits – Unbalanced Non-Relieving PS428
Unbalanced Relieving PS426

Springs – 1-15 PSIG Range (Yellow) P01176
1-30 PSIG Range (Black) P01175
1-60 PSIG Range (White) P01174
2-125 PSIG Range (Gold) P01173

*Tighten panel mount nut 2.8 to 3.4 Nm (25 to 30 in-lbs) of torque.

Specifications

Gauge Ports (2) ..... 1/8 or 1/4 Inch
(Can be used for Full Flow)

Port Threads ..... 1/8, 1/4 Inch

Pressure & Temperature Ratings – .... 0 to 300 PSIG (0 to 20.7 bar)
32°F to 125°F (0°C to 52°C)

Secondary Pressure Ranges –
Standard Pressure ..... 2 to 125 PSIG (0 to 8.6 bar)
Medium Pressure ..... 1 to 60 PSIG (0 to 4.1 bar)
Medium Pressure ..... 1 to 30 PSIG (0 to 2.1 bar)
Low Pressure ..... 1 to 15 PSIG (0 to 1 bar)

Weight – 14R, 14RM, 14**L* ..... 0.3 lb. (0.14 kg)

Materials of Construction

Adjusting Nut ..... Brass

Adjusting Stem & Spring ..... Steel

Body ..... Zinc

Bonnet, Seat, Piston & Valve Poppet ..... Plastic

Seals ..... Nitrile

Parker Hannifin Corporation
Pneumatic Division
Richland, Michigan
www.wattsfluidair.com

R34 Regulators – Miniature

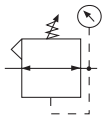
Relieving

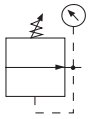
Non-Relieving

R344-02C

R342-0MC

Features

- Diaphragm operated for fast operation
- Large Diaphragm to valve area ratio for precise regulation and high flow capacity
- Balanced valve design for precise regulation
- Available in 2 or 4 port design
- Available with a manifold mount to minimize plumbing
- Suitable for low temperature applications
- Non-rising adjusting knob
- 1/8" - 17 SCFM*
- 1/4" - 19 SCFM*

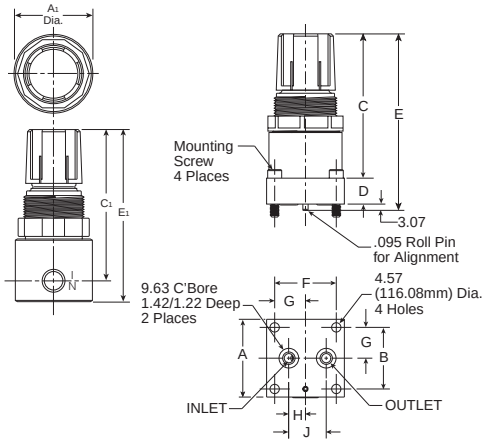

R34 Miniature Regulator Dimensions				
A 1.50 (38.1)	**A1** 1.54 (39.2)	**B** 1.188 (30.18)	**B1** 1.56 (39.6)	**C** 2.75 (69.9)
C1 2.70 (68.6)	**D** .50 (12.7)	**E** 3.25 (82.6)	**E1** 3.25 (82.6)	**F** 1.20 (30.5)
G .60 (15.2)	**H** .32 (8.1)	**J** .73 (18.5)		

Model Type	Port Size	Without Gauge	Without Gauge	Without Gauge	With Gauge	With Gauge	With Gauge
		0 to 30 psig (0.0 to 2.1 bar)	0 to 60 psig (0.0 to 4.1 bar)	0 to 125 psig (0.0 to 8.6 bar)	0 to 30 psig (0.0 to 2.1 bar)	0 to 60 psig (0.0 to 4.1 bar)	0 to 125 psig (0.0 to 8.6 bar)
Relieving	1/8"	R344-01A	R344-01B	R344-01C	R344-01AG	R344-01BG	R344-01CG
	1/4"	R344-02A	R344-02B	**R344-02C**	R344-02AG	R344-02BG	**R344-02CG**
	Manifold Mount	R342-0MA	R342-0MB	**R342-0MC**	––	––	––

Standard part numbers shown bold.
For other models refer to ordering information below.
* SCFM = Standard cubic feet per minute at 100 psig inlet, 90 psig no flow secondary setting and 10 psig pressure drop.

Ordering Information

R34	4	–	02	C	G		

Number of Ports
- 2 2 Ports
- **4* 4 Ports**

* Not Available with Manifold Mount.

Thread
- **- NPT**
- G BSPP

Port
- 01 1/8"
- **02 1/4"**
- **0M Manifold Mount**

Pressure Range
- A 0-30 PSI
- B 0-60 PSI
- **C 0-125 PSI**

Options
- Blank No Options
- **G Gauge**
- K Non-Relieving Diaphragm
- P Panel Mount Nut

Options
- **Blank No Options**
- L† Preset Non-Adjustable
- M† Preset Adjustable

† Inlet Pressure is 100 psig. For other pressures, contact factory.

Preset
- **Blank None**
- XXX* Preset Pressure

* Available Preset Range, 10 to 90 psig in 5 psig increments. For higher pressures, contact factory. (Example: 065 = 65 psig)

BOLD ITEMS ARE MOST POPULAR.

Parker Hannifin Corporation
Pneumatic Division
Richland, Michigan
www.wattsfluidair.com

Technical Information

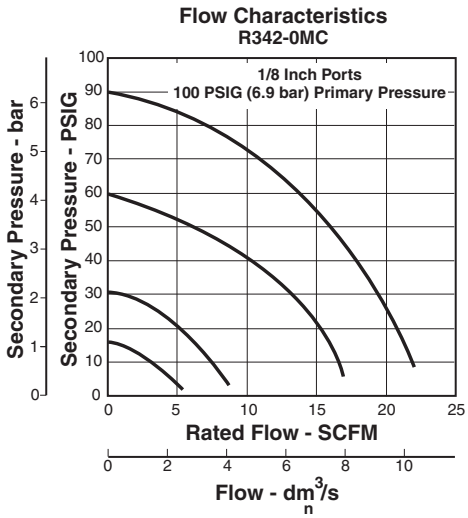

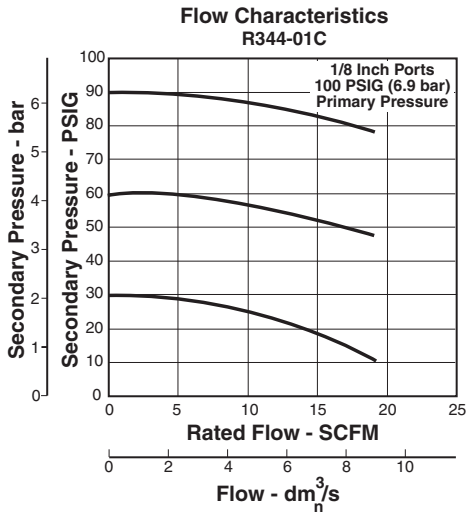

⚠ CAUTION:

REGULATOR PRESSURE ADJUSTMENT – The working range of knob adjustment is designed to permit outlet pressures within their full range. Pressure adjustment beyond this range is also possible because the knob is not a limiting device. This is a common characteristic of most industrial regulators, and limiting devices may be obtained only by special design.
For best performance, regulated pressure should always be set by increasing the pressure up to the desired setting.

⚠ WARNING

Product rupture can cause serious injury.
Do not connect regulator to bottled gas.
Do not exceed maximum primary pressure rating.

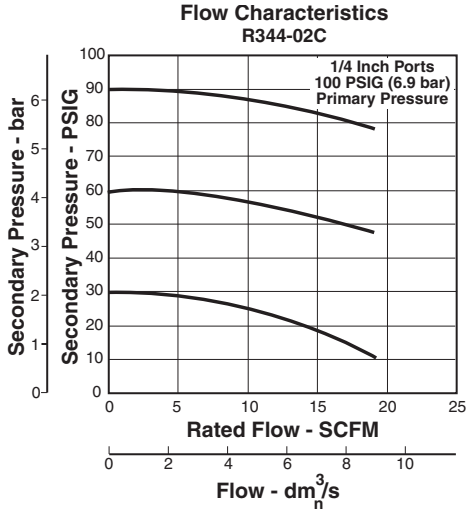

R34 Regulator Kits and Accessories

Diaphragm Assembly – Non-relieving GRP-96-726
Relieving GRP-96-725

Spring, Regulating – 0 to 30 psig (0 to 2.1 bar)..... GRP-95-111
0 to 60 psig (0 to 4.1 bar)..... GRP-96-718
0 to 125 psig (0 to 8.6 bar)..... GRP-96-717

Panel Mount Nut – Aluminum R05x51-A
Plastic..... R05x51-P

Mounting Bracket Kit – (Includes Panel Mount Nut).....SA161x57

Gauges – 0 to 60 psig (0 to 4.1 bar),
1-1/2" Dial Face, 1/8 NPT, CBM K4515N18060
0 to 160 psig (0 to 11.0 bar),
1-1/2" Dial Face, 1/8 NPT, CBM K4515N18160

Tamperproof Knob Kit.....P31KB00AT

Materials of Construction

Body..... Aluminum
Bonnet ..... Acetal
Diaphragm & Seals..... Nitrile
Valve Assembly..... Brass
Springs ..... Steel
Panel Nut..... Acetal

Specifications

Operating Temperature ..... -40° F to 150°F (-40° C to 65.5°C)
Supply Pressure ..... 300 psig Maximum (20.4 bar)
Port Threads..... 1/8, 1/4 Inch
Gauge Ports .....(2) Std 1/8 Inch
(No Gauge Port Version Available)
Weight.....25 lbs. (0.11 kg)

Parker Hannifin Corporation
Pneumatic Division
Richland, Michigan
www.wattsfluidair.com

R24, R25 Regulators – Miniature (Air / Water Service)

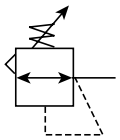

Features

- Lightweight plastic body
- Constructed with a combination of N.S.F. and F.D.A. approved materials
- Unbalanced poppet standard
- Non-rising, push-to-lock adjusting knob
- Compact, 3.10 inch (79mm) high by 1.60 inch (41mm) wide
- Lightweight
- Diaphragm operated

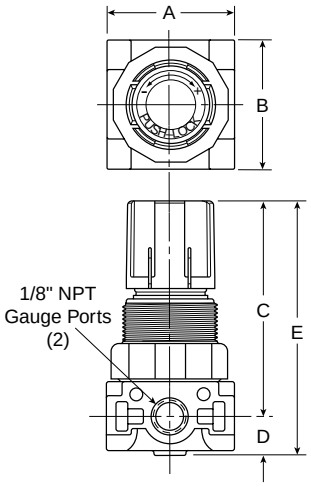

Port Size	NPT	
	Air Service Relieving	Water Service Non-Relieving
	Relieving, 0-125 Reduced Pressure, Without Gauge	
1/8"	**R25-01C**	**R24-01CK**
1/4"	**R25-02C**	**R24-02CK**

Bold Items are Most Popular.
For other models refer to ordering information below.

NOTE: 1.250 Dia. (31.8mm) hole required for panel mounting.

R24, R25 Regulator Dimensions		
A 1.60 (41)	**B** 1.60 (41)	**C** 2.61 (66)
D 0.49 (13)	**E** 3.10 (79)	

Inches (mm)

Ordering Information

R25 — 02 C

Series	Port Size	Pressure Range	Relief
R24 EPDM Elastomers (Water)	**01 1/8 Inch**	**A 0 to 25 psig (0 to 2 bar)**	**Blank Relieving**
R25 Buna Elastomers (Air)	**02 1/4 Inch**	**B 0 to 60 psig (0 to 4 bar)**	K Non-Relieving (For Water Service)
		C 0 to 125 psig (0 to 8 bar)	P Panel Mount Nut

BOLD ITEMS ARE MOST POPULAR.

Parker Hannifin Corporation
Pneumatic Division
Richland, Michigan
www.wattsfluidair.com

Technical Information

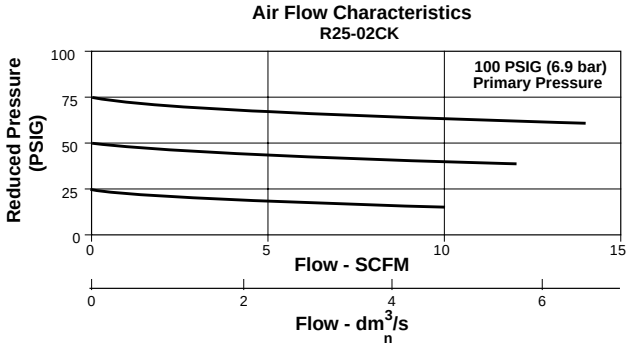

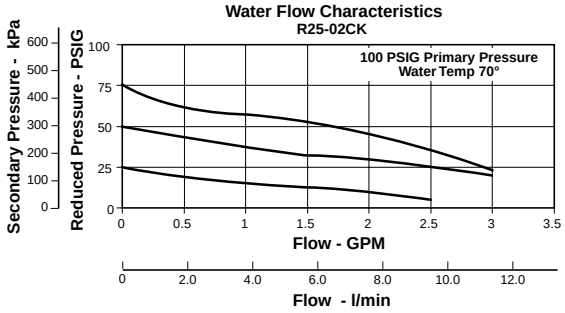

⚠ WARNING

Product rupture can cause serious injury.
Do not connect regulator to bottled gas.
Do not exceed maximum primary pressure rating.

⚠ CAUTION:

REGULATOR PRESSURE ADJUSTMENT – The working range of knob adjustment is designed to permit outlet pressures within their full range. Pressure adjustment beyond this range is also possible because the knob is not a limiting device. This is a common characteristic of most industrial regulators, and limiting devices may be obtained only by special design.
For best performance, regulated pressure should always be set by increasing the pressure up to the desired setting.

R24, R25 Regulator Kits and Accessories

Panel Mount Nut –
- Plastic R05X51-P
- Aluminum R05X51-A

Mounting Bracket and Nut SA161X57

Service Kits –
- Relieving (Buna) RKR25Y
- Non-Relieving (Buna) RKR25KY
- Relieving (EPDM) RKR24Y
- Non-Relieving (EPDM) RKR24KY

Springs –
- 0-25 psig Spring SPR-375-1
- 0-60 psig Spring SPR-376
- 0-125 psig Spring SPR-377

Specifications

Gauge Ports (2) ..... 1/8 Inch (Can be used for full flow)

Pressure Rating – Maximum Inlet Pressure 150 psig..... (10.0 bar)

Port Threads ..... 1/8, 1/4 Inch

Temperature Rating ..... 40°F to 125°F (4°C to 52°C)

Weight ..... 0.25 lb. (0.11 kg)

Materials of Construction

Adjusting Screw ..... Steel

Body ..... Acetal

Bonnet and Seat ..... Acetal

Diaphragm (R25) ..... Buna N

Diaphragm (R24) ..... EPDM

Seals (R25) ..... Buna N

Seals (R24) ..... EPDM

Springs ..... Stainless Steel

Valve Poppet (R25) ..... Buna N

Valve Poppet (R24) ..... EPDM

Parker Hannifin Corporation
Pneumatic Division
Richland, Michigan
www.wattsfluidair.com

R45, R46 Regulators – Miniature (Air / Water Service)

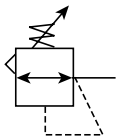

Features

- Lightweight plastic body
- Constructed with a Combination of N.S.F. and F.D.A. approved materials
- Unbalanced poppet standard
- Non-rising, push-to-lock adjusting knob
- Compact, 3.43 inch (87.1mm) high by 2.06 inch (52.3mm) wide
- Lightweight
- Diaphragm operated

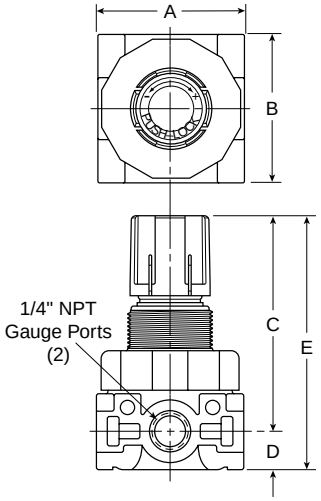

Port Size	NPT	
	Air Service Relieving	Water Service Non-Relieving
	Relieving, 0-125 Reduced Pressure, Without Gauge	
1/4"	**R45-02C**	**R46-02CK**
3/8"	**R45-03C**	**R46-03CK**

Bold Items are Most Popular.
For other models refer to ordering information below.

NOTE: 1.250 Dia. (31.8mm) hole required for panel mounting.

R45, R46 Regulator Dimensions		
A 2.06 (52)	**B** 2.06 (52)	**C** 2.90 (74)
D 0.53 (14)	**E** 3.43 (87)	

Inches (mm)

Ordering Information

R45 — 02 C

Series
R45 EPDM Elastomers (Air)
R46 EPDM Elastomers (Water)

Port Size
02 1/4 Inch
03 3/8 Inch

Pressure Range
A 0 to 25 psig (0 to 2 bar)
B 0 to 60 psig (0 to 4 bar)
C 0 to 125 psig (0 to 8 bar)

Relief
Blank Relieving
K Non-Relieving (For Water Service)
P Panel Mount Nut

BOLD ITEMS ARE MOST POPULAR.

Parker Hannifin Corporation
Pneumatic Division
Richland, Michigan
www.wattsfluidair.com

Technical Information

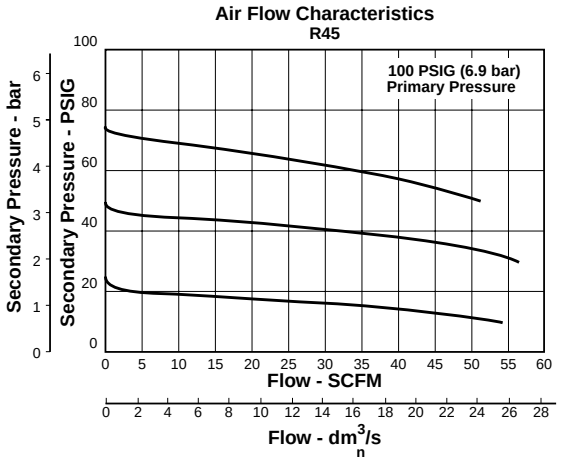

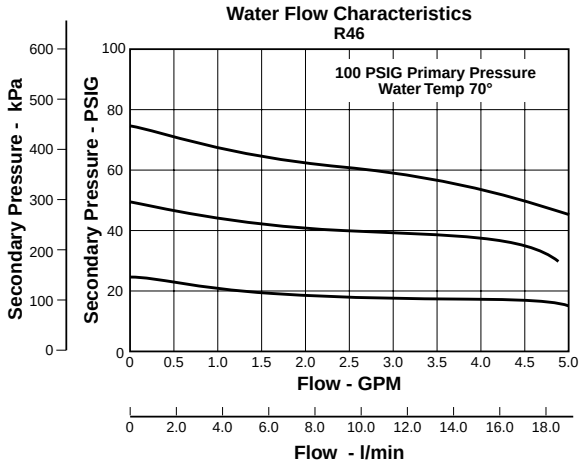

⚠ WARNING

Product rupture can cause serious injury.
Do not connect regulator to bottled gas.
Do not exceed maximum primary pressure rating.

⚠ CAUTION:

REGULATOR PRESSURE ADJUSTMENT – The working range of knob adjustment is designed to permit outlet pressures within their full range. Pressure adjustment beyond this range is also possible because the knob is not a limiting device. This is a common characteristic of most industrial regulators, and limiting devices may be obtained only by special design.
For best performance, regulated pressure should always be set by increasing the pressure up to the desired setting.

R45, R46 Regulator Kits and Accessories

Panel Mount Nut –
- Plastic R05X51
- Aluminum R05X51-A

Mounting Bracket and Nut SA161X57

Service Kits –
- Relieving RKR45Y
- Non-Relieving RKR45KY

Springs –
- 0-25 psig Spring SPR-346
- 0-60 psig Spring SPR-47
- 0-125 psig Spring SPR-48

Specifications

Gauge Ports (2) ..... 1/4 Inch
Can be used for full flow)

Pressure Rating – Maximum Inlet Pressure 150 psig..... (10.0 bar)

Port Threads ..... 1/4, 3/8 Inch

Temperature Rating ..... 40°F to 125°F (4°C to 52°C)

Weight ..... 0.38 lb. (0.17 kg)

Materials of Construction

Adjusting Screw ..... Steel

Body ..... Acetal

Bonnet and Seat ..... Acetal

Diaphragm (R45) ..... Buna N

Diaphragm (R46) ..... EPDM

Seals (R45) ..... Buna N

Seals (R46) ..... EPDM

Springs ..... Stainless Steel

Valve Poppet (R45) ..... Buna N

Valve Poppet (R46) ..... EPDM

Parker Hannifin Corporation
Pneumatic Division
Richland, Michigan
www.wattsfluidair.com

R364, R374 Regulators – Miniature

Features

- High flow and high sensitivity
- Constant bleed option for semi-precision applications
- Can be used for water service (non-relieving)
- Unbalanced poppet standard
- Diaphragm operated for fast response
- Non-rising adjusting knob
- Stainless steel version available (see stainless steel section of catalog)
- High flow: 10 SCFM§ (Air)
  1.25 GPM (Water)

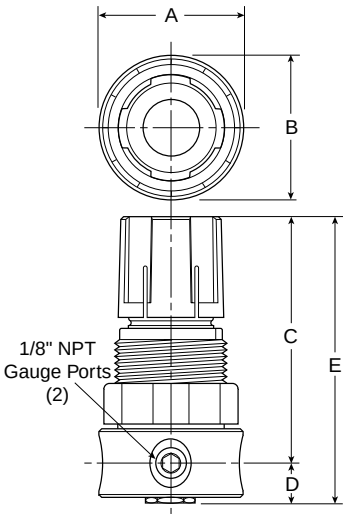

Port Size	NPT
Brass	
1/8"	**R364-01C**
1/4"	**R364-02C**
Aluminum	
1/8"	**R374-01C**
1/4"	**R374-02C**

Standard part numbers shown bold.
For other models refer to ordering information below.

NOTE: 1.250 Dia. (31.8mm) hole required for panel mounting.

§ SCFM = Standard cubic feet per minute at 100 PSIG inlet, 75 PSIG no flow secondary setting and 25% pressure drop.

R364, R374 Regulator Dimensions		
A 1.56 (39.7)	**B** 1.56 (39.7)	**C** 2.56 (65.1)
D 0.50 (12.7)	**E** 3.06 (77.8)	

Inches (mm)

Ordering Information

R	364	—	01	C	G			/**

Series
- **R364 Brass**
- **R374 Aluminum**

Port Threads
- **– NPT**
- G BSPP

PortSize
- **01 1/8 Inch**
- **02 1/4 Inch**

Reduced Pressure Range
- **A 0-25 PSIG**
- **B 0-60 PSIG**
- **C 0-125 PSIG**

Options
- **G Gauge**
- K Non-Relieving
- P Panel Mount Nut
- T Tamperproof
- X64 Fluorocarbon O-Rings and Diaphragm
- X42 Constant Bleed Innervalve
- X21 High Flow Innervalve
- X10 Max. Pressure Limiting Adjusting Screw
- X82 Brass Spring Cage / Adjusting Screw

Pressure Preset Options
- **Blank No Options**
- L† Preset Non-Adjustable
- P† Preset Adj.
- Q† Preset Tamperproof Adjustable
- S† Pressure Limiter Max. Adjustable
- T† Pressure Limiter Max. Non- Adj.

† Inlet Pressure is 100 PSIG. For other pressures, contact factory.

Preset / Pressure Limited
- **Blank None**
- XXX* Preset Pressure
- XXX* Pressure Limited

* Available Preset / Pressure Limited Range, 10 to 90 PSIG in 5 PSIG increments. For higher pressures, contact factory.
(Example: 065 = 65 PSIG)

Engineering Change Designator
Will be entered at factory.

BOLD ITEMS ARE MOST POPULAR.

Parker Hannifin Corporation
Pneumatic Division
Richland, Michigan
www.wattsfluidair.com

Technical Information

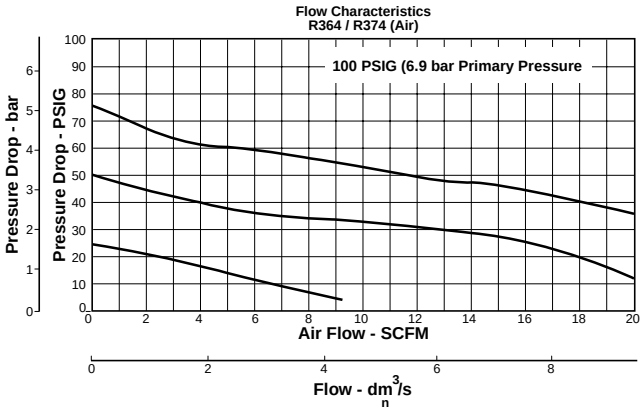

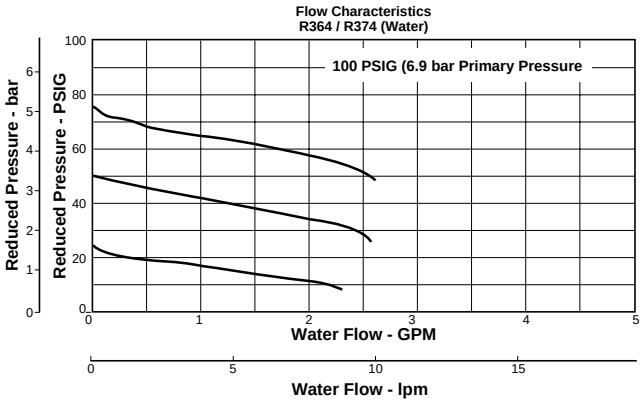

⚠ WARNING

Product rupture can cause serious injury.
Do not connect regulator to bottled gas.
Do not exceed maximum primary pressure rating.

⚠ CAUTION:

REGULATOR PRESSURE ADJUSTMENT – The working range of knob adjustment is designed to permit outlet pressures within their full range. Pressure adjustment beyond this range is also possible because the knob is not a limiting device. This is a common characteristic of most industrial regulators, and limiting devices may be obtained only by special design.
For best performance, regulated pressure should always be set by increasing the pressure up to the desired setting.

R364, R374 Regulator Kits & Accessories

Gauges – 1-1/2" Dial Size, 1/8" Back Connection
0 to 60 PSIG (0 to 400 kPa)..... K4515N18060

1-1/2" Dial Size, 1/8" Back Connection
0 to 160 PSIG, (0 to 1100 kPa)..... K4515N18160

Mounting Bracket Kit SA161X57
(Includes Panel Mount Nut)

Panel Mount Nut – Plastic.....R05X51-P
Aluminum.....R05X51-A

Spring Cage & Knob CKR364Y

Spring Cage Kit (Tamperproof) CKR364T

Repair Kits –
Standard Nitrile –
Non-Relieving Diaphragm, Valve Assembly RKR163Y
Relieving Diaphragm, Valve Assembly RKR164Y

Fluorocarbon –
Non-Relieving Diaphragm, Valve Assembly RKR164KX64
Relieving Diaphragm, Valve Assembly RKR164X64

Specifications

Gauge Ports (2) ..... 1/8 Inch

Port Threads ..... 1/8, 1/4 Inch

Primary Pressure Rating ..... 2 to 125 PSIG (-15 to 8.5 bar)

Supply Pressure ..... 300 PSIG Maximum (20.4 bar)

Temperature Rating ..... 40°F to 125°F (4.4°C to 52°C)

Weight – Brass Body ..... 0.5 lb. (0.23 kg) / Unit
25 lb. (11.34 kg) / 48-Unit Master Pack

Aluminum Body ..... 0.25 lb. (0.11 kg) / Unit
15 lb. (6.80 kg) / 48-Unit Master Pack

Materials of Construction

Adjusting Screw ..... Steel

Body – R364..... Brass
R374..... Aluminum

Springs – Adjusting..... Steel
Bottom .....Stainless Steel

Spring Cage ..... Acetal

Bottom Plug, Innervalve, Diaphragm Buttom ..... Brass

Parker Hannifin Corporation
Pneumatic Division
Richland, Michigan
www.wattsfluidair.com

15R Regulators – Economy

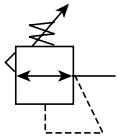

Features

- Solid control piston with resilient seat for service-free operation
- Non-rising “locking” adjusting knob
- Compact, 3.30 inch (84mm) high by 2.12 inch (54mm) wide
- Easily serviced
- High flow: 1/4" – 21 SCFM§
  3/8" – 28 SCFM§

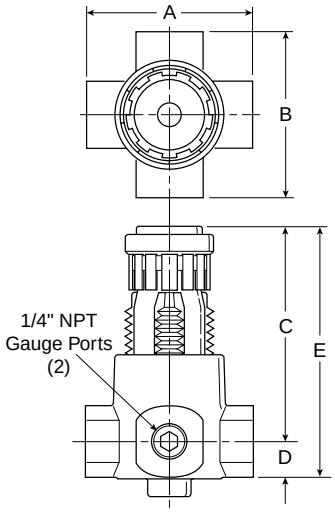

Port Size	NPT
Without Gauge	
1/4"	**15R113F***
3/8"	**15R213F***
With Gauge	
1/4"	**15R118F***
3/8"	**15R218F***

Standard part numbers shown bold.
For other models refer to ordering information below.

NOTE: 1.218 Dia. (31mm) hole required for panel mounting.

§ SCFM = Standard cubic feet per minute at 100 PSIG inlet, 90 PSIG no flow secondary setting and 10 PSIG pressure drop.

15R Regulator Dimensions		
A 2.12 (54)	**B** 2.00 (51)	**C** 2.60 (66)
D 0.70 (18)	**E** 3.30 (84)	

Inches (mm)

Ordering Information

15R	1	13	F	*

Port Size
- **1 1/4 Inch**
- **2 3/8 Inch**

Pressure Range

Without Gauge
- 10 30 PSIG
- 11 60 PSIG
- 12 15 PSIG
- **13 125 PSIG**

With Gauge
- 15 30 PSIG
- 16 60 PSIG
- 17 15 PSIG
- **18 125 PSIG**

Relief
- **F Relieving**
- G Non-Relieving
- H Low Temp. Relieving
- J Low Temp. Non-Relieving

Engineering Level
- * Will be Entered at Factory

BOLD ITEMS ARE MOST POPULAR.

Parker Hannifin Corporation
Pneumatic Division
Richland, Michigan
www.wattsfluidair.com

Technical Information

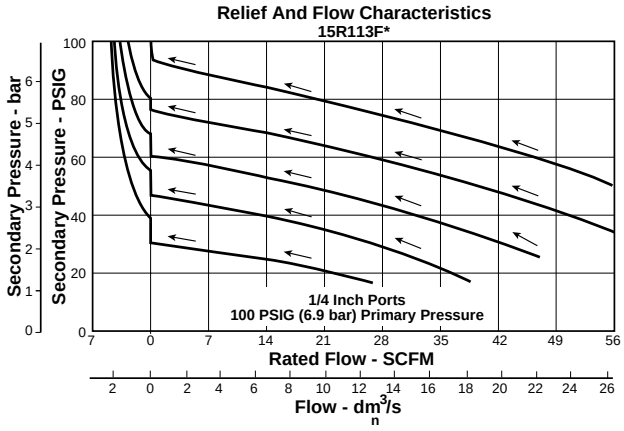

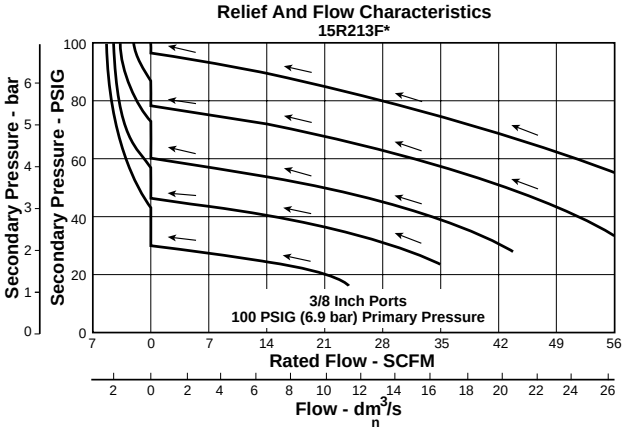

⚠ WARNING

Product rupture can cause serious injury.
Do not connect regulator to bottled gas.
Do not exceed maximum primary pressure rating.

⚠ CAUTION:

REGULATOR PRESSURE ADJUSTMENT – The working range of knob adjustment is designed to permit outlet pressures within their full range. Pressure adjustment beyond this range is also possible because the knob is not a limiting device. This is a common characteristic of most industrial regulators, and limiting devices may be obtained only by special design.
For best performance, regulated pressure should always be set by increasing the pressure up to the desired setting.

15R Regulator Kits & Accessories

Body Service Kit – Unbalanced PS424B
Bonnet Assembly Kit L01369
Gauges – 30 PSIG, 1/8" NPT (0 to 2.1 bar) K4515N18030
60 PSIG, 1/8" NPT (0 to 4.1 bar) K4515N18060
160 PSIG, 1/8" NPT (0 to 11.0 bar) K4515N18160
60 PSIG, 1/4" NPT (0 to 4.1 bar) K4520N14060
160 PSIG, 1/4" NPT (0 to 11.0 bar) K4520N14160
Mounting Bracket Kit* (Includes Panel Mount Nut)..... PS417B
Panel Mount Nuts* – Plastic..... P78652
Metal P01531
Service Kits – Non-Relieving PS422
Relieving PS423
Springs – 1-15 PSIG Range (Yellow) P01176
1-30 PSIG Range (Black) P01175
1-60 PSIG Range (White) P01174
2-125 PSIG Range (Gold) P01173

*Tighten panel mount nut 2.8 to 3.4 Nm (25 to 30 in-lbs) of torque.

Specifications

Gauge Ports (2) ..... 1/4 Inch
(Can be used for Full Flow)
Port Threads ..... 1/4, 3/8 Inch
Pressure Ratings.....0 to 250 PSIG (0 to 17.2 bar)
Secondary Pressure Ranges –
Standard Pressure..... 2 to 125 PSIG (0 to 8.6 bar)
Medium Pressure ..... 1 to 60 PSIG (0 to 4.1 bar)
Medium Pressure ..... 1 to 30 PSIG (0 to 2.1 bar)
Low Pressure..... 1 to 15 PSIG (0 to 1 bar)
Temperature Ratings.....32°F to 125°F (0°C to 52°C)
Low Temperature ..... -4°F to 125°F (-20°C to 52°C)
Weight .....0.5 lb. (0.23 kg)

Materials of Construction

Adjusting Nut.....Brass
Adjusting Stem & Spring .....Steel
Body ..... Zinc
Bonnet, Seat, Piston & Valve Poppet ..... Plastic
Seals .....Nitrile

Parker Hannifin Corporation
Pneumatic Division
Richland, Michigan
www.wattsfluidair.com

R10 Regulators – Compact

Features

- Secondary aspiration plus balanced poppet provides quick response and accurate pressure regulation
- Rolling diaphragm for extended life
- Two high flow 1/4" gauge ports can be used as additional outlets
- Easily serviced
- Removable non-rising knob for panel mounting and tamper resistance
- High flow: 1/4" – 53 SCFM§
  3/8" – 60 SCFM§
  1/2" – 75 SCFM§

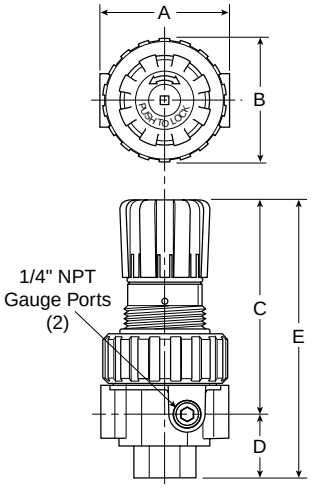

Port Size	NPT
Without Gauge	
1/4"	**R10-0211A***
3/8"	**R10-0311A***
1/2"	**R10-0411A***
With 160 PSI Gauge	
1/4"	**R10-0218A***
3/8"	**R10-0318A***
1/2"	**R10-0418A***

Standard part numbers shown bold.
For other models refer to ordering information below.
NOTE: 2.00 Dia. (51mm) hole required for panel mounting.
§ SCFM = Standard cubic feet per minute at 100 psig inlet, 90 psig no flow secondary setting and 10 psig pressure drop.

R10 Regulator Dimensions				
A	**B**	**C**	**D**	**E**
2.81 (71)	2.74 (70)	4.69 (119)	1.39 (35)	6.08 (154)

inches (mm)

Ordering Information

R10	—	02	11	A		

Port Threads
- **– NPT**
- G BSPP

* 1/4 & 3/8 inch meet ISO 1179-1 Standard.

Port Size
- **02 1/4 Inch**
- **03 3/8 Inch**
- **04 1/2 Inch**

Pressure Range
- Without Gauge
- **11 0-60 PSIG**
- **13 0-125 PSIG**
- 15 0-250 PSIG
- With Gauge
- **16 0-60 PSIG**
- **18 0-125 PSIG**
- 21 0-250 PSIG

Relief
- **A Relieving**
- L Non-Relieving

Engineering Level
- * Will be Entered at Factory

Options
- **Blank No Options**
- L† Preset Non-Adjustable
- P† Preset Adjustable
- R Reverse Flow

† Inlet Pressure is 100 PSIG. For other pressures, contact factory.

BOLD ITEMS ARE MOST POPULAR.

Parker Hannifin Corporation
Pneumatic Division
Richland, Michigan
www.wattsfluidair.com

Technical Information

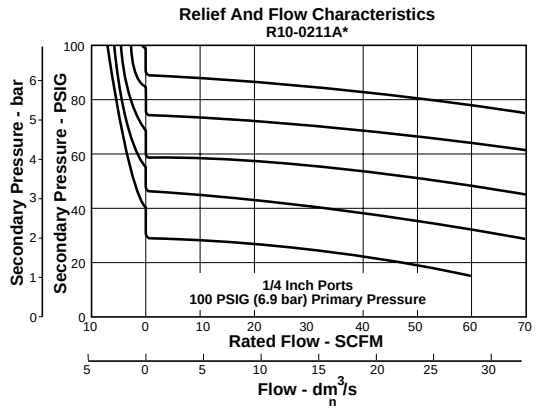

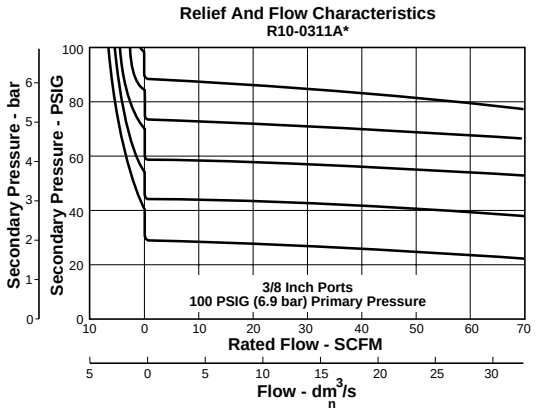

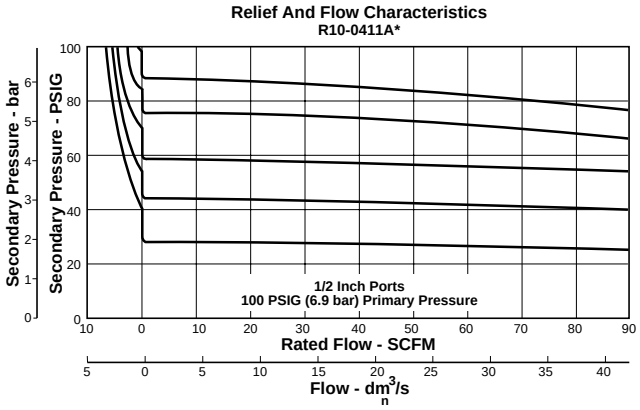

⚠ WARNING

Product rupture can cause serious injury.
Do not connect regulator to bottled gas.
Do not exceed maximum primary pressure rating.

⚠ CAUTION:

REGULATOR PRESSURE ADJUSTMENT – The working range of knob adjustment is designed to permit outlet pressures within their full range. Pressure adjustment beyond this range is also possible because the knob is not a limiting device. This is a common characteristic of most industrial regulators, and limiting devices may be obtained only by special design.
For best performance, regulated pressure should always be set by increasing the pressure up to the desired setting.

R10 Regulator Kits & Accessories

Bonnet Assembly Kit PS715

Control Knob P04069B

Gauges – 2" Dial Face
60 psig (0 to 4.1 bar)..... K4520N14060
160 psig (0 to 11.0 bar)..... K4520N14160
300 psig (0 to 20.0 bar)..... K4520N14300

1-3/4" Digital Round Face
160 psig (0 to 11.0 bar)..... K4517N14160D

Mounting Bracket Kit (Includes Panel Mount Nut)..... PS707

Panel Mount Nut – Plastic P04082
Metal P04079B

Reverse Flow Service Conversion Kit –
Relieving PS708R

Service Kit – Relieving (Includes Poppet)..... PS708
Non-Relieving (Includes Poppet)..... PS709

Springs – 1-30 psig Range..... P01698
1-60 psig Range..... P04062
2-125 psig Range..... P04063
5-250 psig Range..... P04064

Tamperproof Kit..... PS737

Specifications

Gauge Ports (2) ..... 1/4 Inch
(Can be used as additional High Flow 1/4 Inch Outlet Ports)

Port Threads ..... 1/4, 3/8, 1/2 Inch **Primary Pressure Rating –**
Maximum Primary Pressure ..... 250 psig (17.2 bar)

Secondary Pressure Ranges –
Standard Pressure..... 2 to 125 psig (0 to 8.6 bar)
Low Pressure..... 1 to 60 psig (0 to 4.1 bar)
High Pressure..... 5 to 250 psig (0.4 to 17.2 bar)

Temperature Rating .....32°F to 175°F (0°C to 80°C)
Low Temperature ..... -4°F to 125°F (-20°C to 52°C)

Weight .....1.6 lb. (0.7 kg)

Materials of Construction

Adjusting Stem ..... Steel

Body ..... Zinc

Bonnet, Piston Stem, Valve Poppet & Cap .....Plastic

Collar, Knob.....Plastic

Diaphragm ..... Nitrile

Seals ..... Nitrile

Springs – Poppet.....Stainless
Control..... Steel

Parker Hannifin Corporation
Pneumatic Division
Richland, Michigan
www.wattsfluidair.com

R10 Regulators – Standard

Features

- Secondary aspiration plus balanced poppet provides quick response and accurate pressure regulation
- Rolling diaphragm for extended life
- Two high flow 1/4" gauge ports can be used as additional outlets
- Easily serviced
- Removable non-rising knob for panel mounting and tamper resistance
- High flow: 3/4" – 90 SCFM§

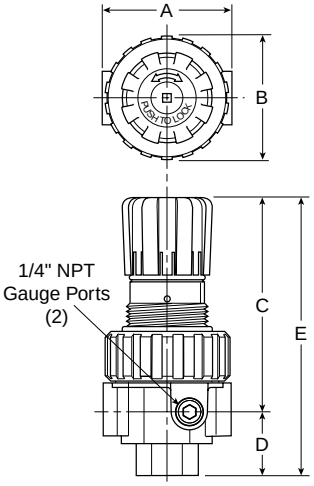

Port Size	NPT
Without Gauge	
3/4"	**R10-0611A***
With 160 PSI Gauge	
3/4"	**R10-0618A***

Standard part numbers shown bold.
For other models refer to ordering information below.
NOTE: 2.00 Dia. (51mm) hole required for panel mounting.
§ SCFM = Standard cubic feet per minute at 100 psig inlet, 90 psig no flow secondary setting and 10 psig pressure drop.

R10 Regulator Dimensions				
A	**B**	**C**	**D**	**E**
3.24 (82)	2.74 (70)	4.79 (122)	1.61 (41)	6.40 (163)

inches (mm)

Ordering Information

R10	—	06	11	A		

Port Threads
- **– NPT**
- G BSPP

Port Size
- **06 3/4 Inch**

Pressure Range
- Without Gauge
- **11 0-60 PSIG**
- **13 0-125 PSIG**
- 15 0-250 PSIG
- With Gauge
- **16 0-60 PSIG**
- **18 0-125 PSIG**
- 21 0-250 PSIG

Relief
- **A Relieving**
- L Non-Relieving

Engineering Level
- * Will be Entered at Factory

Options
- **Blank No Options**
- L† Preset Non-Adjustable
- P† Preset Adjustable
- R Reverse Flow

† Inlet Pressure is 100 PSIG. For other pressures, contact factory.

BOLD ITEMS ARE MOST POPULAR.

Parker Hannifin Corporation
Pneumatic Division
Richland, Michigan
www.wattsfluidair.com

Technical Information

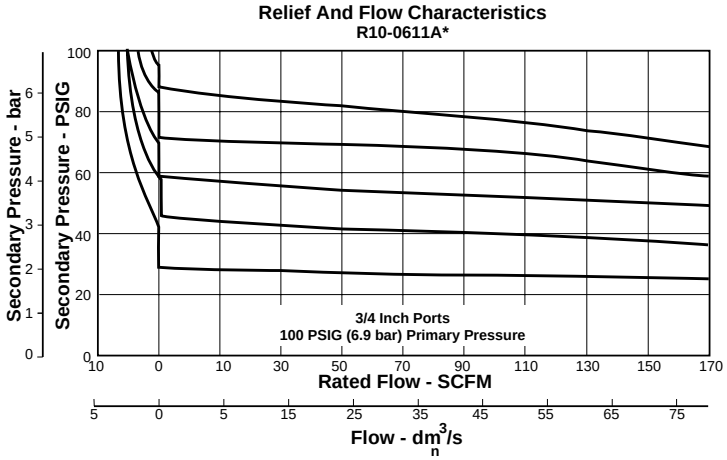

⚠ WARNING

Product rupture can cause serious injury.
Do not connect regulator to bottled gas.
Do not exceed maximum primary pressure rating.

⚠ CAUTION:

REGULATOR PRESSURE ADJUSTMENT – The working range of knob adjustment is designed to permit outlet pressures within their full range. Pressure adjustment beyond this range is also possible because the knob is not a limiting device. This is a common characteristic of most industrial regulators, and limiting devices may be obtained only by special design.
For best performance, regulated pressure should always be set by increasing the pressure up to the desired setting.

R10 Regulator Kits & Accessories

Bonnet Assembly Kit PS715

Control Knob P04069B

Gauges – 2" Dial Face
60 psig (0 to 4.1 bar)..... K4520N14060
160 psig (0 to 11.0 bar)..... K4520N14160
300 psig (0 to 20.0 bar)..... K4520N14300

1-3/4" Digital Round Face
160 psig (0 to 11.0 bar)..... K4517N14160D

Mounting Bracket Kit (Includes Panel Mount Nut)..... PS807

Panel Mount Nut – Plastic..... P04082
Metal P04079B

Reverse Flow Service Conversion Kit –
Relieving..... PS808R

Service Kit – Relieving (Includes Poppet)..... PS808
Non-Relieving (Includes Poppet)..... PS809

Springs – 1-30 psig Range..... P01698
1-60 psig Range..... P04062
2-125 psig Range..... P04063
5-250 psig Range..... P04064

Tamperproof Kit PS737

Specifications

Gauge Ports (2)..... 1/4 Inch
(Can be used as additional High Flow 1/4 Inch Outlet Ports)

Port Threads..... 1/2, 3/4 Inch

Primary Pressure Rating –
Maximum Primary Pressure..... 250 psig (17.2 bar)

Secondary Pressure Ranges –
Standard Pressure..... 2 to 125 psig (0 to 8.6 bar)
Low Pressure..... 1 to 60 psig (0 to 4.1 bar)
High Pressure..... 5 to 250 psig (0.4 to 17.2 bar)

Temperature Rating..... 32°F to 175°F (0°C to 80°C)
Low Temperature..... -4°F to 125°F (-20°C to 52°C)

Weight..... 2.5 lb. (1.1 kg)

Materials of Construction

Adjusting Stem ..... Steel

Body..... Zinc

Bonnet, Piston Stem, Valve Poppet & Cap ..... Plastic

Collar, Knob..... Plastic

Diaphragm ..... Nitrile

Seals..... Nitrile

Springs – Poppet..... Stainless
Control..... Steel

Parker Hannifin Corporation
Pneumatic Division
Richland, Michigan
www.wattsfluidair.com

R119 Regulators – Standard

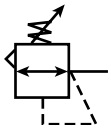

Features

- High flow performance featuring rugged design for the most demanding applications
- Ideal for those installations calling for constant pressure with wide variation in flow
- Diaphragm operated design with balanced poppet design for quick and accurate regulation
- Secondary aspiration plus balanced poppet provides quick response and accurate pressure regulation
- Heavy duty tee handle adjustment
- Reverse flow version available
- Panel mount version available
- High flow: 1/4" – 100 SCFM§
  3/8" – 110 SCFM§
  1/2" – 150 SCFM§

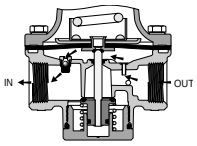

X80 Reverse Flow Option

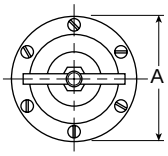

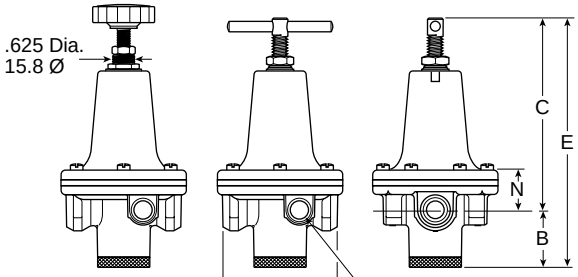

Panel Mount Version

1/4" Gauge Ports (2)

Port Size	NPT Relieving	BSPP Relieving
Without Gauge 0-125 PSIG Reduced Pressure		
1/4"	**R119-02C**	**R119G02C**
3/8"	**R119-03C**	**R119G03C**
1/2"	**R119-04C**	**R119G04C**
With Gauge 0-125 PSIG Reduced Pressure		
1/4"	**R119-02CG**	—
3/8"	**R119-03CG**	—
1/2"	**R119-04CG**	—

Standard part numbers shown bold.
For other models refer to ordering information below.

§ SCFM = Standard cubic feet per minute at 100 PSIG inlet, 75 PSIG no flow secondary setting, and 20 PSIG pressure drop.

R119 Regulator Dimensions					
A	B	C	D	E	N
R119-02C, R119-03C					
3.00 (76)	1.38 (35)	5.29 (134)	2.74 (70.5)	6.67 (169)	.90 (24)
R119-04C					
3.56 (90)	1.56 (40)	5.34 (136)	3.25 (83)	6.90 (175)	1.45 (37)

inches (mm)

Ordering Information

R	119	—	02	C		/**

Port Threads
- **– NPT**
- G BSPP

Port Size
- **02 1/4 Inch**
- **03 3/8 Inch**
- **04 1/2 Inch**

Reduced Pressure Range
- A 0-25 PSIG
- B 0-60 PSIG
- **C 0-125 PSIG**
- D 0-250 PSIG

Options
- **– None**
- **G Gauge**
- K† Non-Relieving
- P Panel Mount
- X64** Fluorocarbon O-Rings and Diaphragm
- X80* Reverse Flow
- X7 Brass Bottom Plug

Engineering Level
- * Will be Entered at Factory

* Reverse flow for use downstream of control valves.
** Brass Bottom Plug Standard with X64 Option.
† Not available with 250 PSIG spring

BOLD ITEMS ARE MOST POPULAR.

Parker Hannifin Corporation
Pneumatic Division
Richland, Michigan
www.wattsfluidair.com

Technical Information

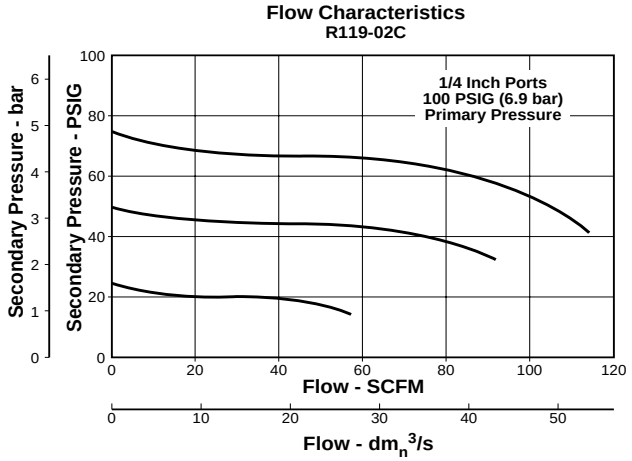

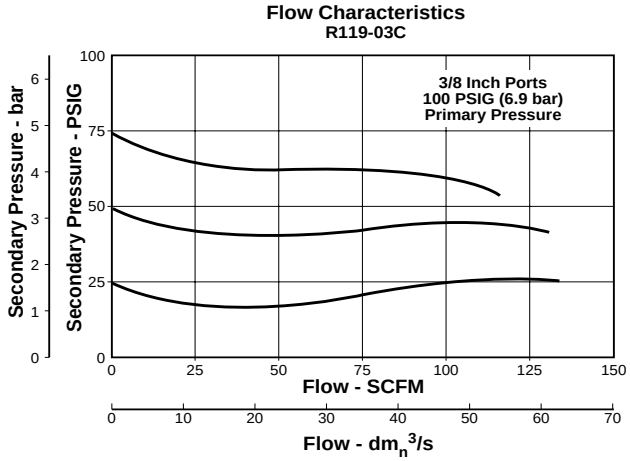

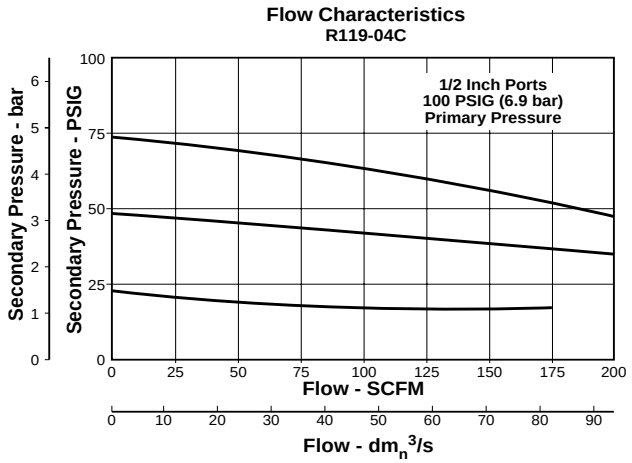

⚠ WARNING

Product rupture can cause serious injury.
Do not connect regulator to bottled gas.
Do not exceed maximum primary pressure rating.

⚠ CAUTION:

REGULATOR PRESSURE ADJUSTMENT – The working range of knob adjustment is designed to permit outlet pressures within their full range. Pressure adjustment beyond this range is also possible because the knob is not a limiting device. This is a common characteristic of most industrial regulators, and limiting devices may be obtained only by special design.
For best performance, regulated pressure should always be set by increasing the pressure up to the desired setting.

R119 Regulator Kits & Accessories

Gauges –

2" Dial Face
60 psig (0 to 4.1 bar) K4520N14060
160 psig (0 to 11.0 bar) K4520N14160
300 psig (0 to 20.0 bar) K4520N14300

1-3/4" Digital Round Face
160 psig (0 to 11.0 bar) K4517N14160D

Mounting Bracket Kit –
1/4", 3/8" SA15Y57
1/2" 18A57

Panel Mount Conversion Kit –
1/4", 3/8" 4202
1/2" 4204

Repair Kits –
Non-Relieving Diaphragm, Valve Assembly (1/4", 3/8"; All PSIG) RK118Y
Relieving Diaphragm, Valve Assembly (1/4", 3/8"; All PSIG) RK119Y
Non-Relieving Diaphragm, Valve Assembly (1/2"; 25, 60, 125 PSIG) RK118A
Non-Relieving Diaphragm, Valve Assembly (1/2"; 250 PSIG) RK118A250
Relieving Diaphragm, Valve Assembly (1/2"; 25, 60, 125 PSIG) RK119A
Relieving Diaphragm, Valve Assembly (1/2"; 250 PSIG) RK119A250
Spring Cage & T-Handle Kit (1/4 & 3/8) RKC119Y
Spring Cage & Insert Only Kit (1/2) SAC18A3/BK

For Fluorocarbon Repair Kits, add X64 to Kit Number suffix.

Specifications

Gauge Ports (2) ..... 1/4 Inch
Port Threads ..... 1/4, 3/8, 1/2 Inch
Reduced Pressure Range ..... 2 to 125 PSIG (0.15 to 8.5 bar)
Supply Pressure ..... 300 PSIG Maximum (20.4 bar)
Temperature Rating ..... 40°F to 125°F (4.4°C to 52°C)
Weight –
R119-02, R119-03 ..... 1.8 lb. (0.82 kg) / Unit
26 lb. (11.79 kg) / 12-Unit Master Pack
R119-04 ..... 3.2 lb. (1.45 kg) / Unit
27 lb. (12.25 kg) / 8-Unit Master Pack

Materials of Construction

Adjusting Screw, Springs ..... Steel
Body, Spring Cage ..... Zinc
Bottom Plug ..... Nylon
Innervalve ..... Brass
Seals ..... Buna N

Parker Hannifin Corporation
Pneumatic Division
Richland, Michigan
www.wattsfluidair.com

R119 Regulators – Hi-Flow

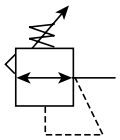

Features

- High flow performance featuring rugged design for the most demanding applications
- Ideal for those installations calling for constant pressure with wide variation in flow
- Diaphragm operated design with balanced poppet design for quick and accurate regulation
- Secondary aspiration plus balanced poppet provides quick response and accurate pressure regulation
- Heavy duty tee handle adjustment
- Reverse flow version available
- High flow: 3/4" 300 SCFM
  1" 400 SCFM
  1-1/4" & 1-1/2" 500 SCFM

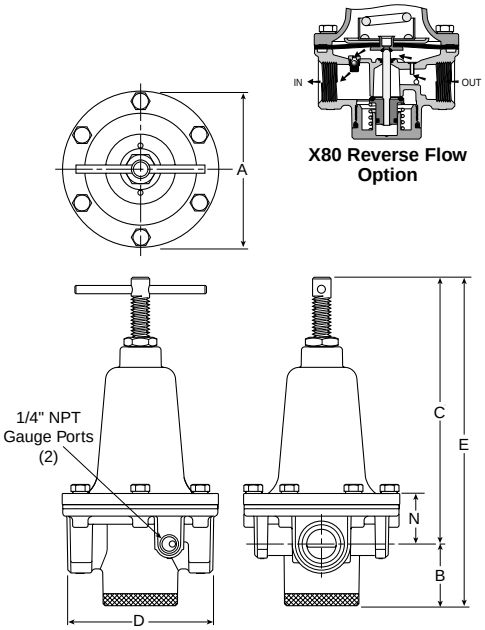

Port Size	NPT Relieving
Without Gauge 0-125 PSIG Reduced Pressure	
3/4"	**R119-06C**
1"	**R119-08C**
1-1/4"	**R119-10C**
1-1/2"	**R119-12C**
With Gauge 0-125 PSIG Reduced Pressure	
3/4"	**R119-06CG**
1"	**R119-08CG**
1-1/4"	**R119-10CG**
1-1/2"	**R119-12CG**

Standard part numbers shown bold.
For other models refer to ordering information below.

§ SCFM = Standard cubic feet per minute at 100 PSIG inlet, 75 PSIG no flow secondary setting, and 20 PSIG pressure drop.

R119 Regulator Dimensions					
A	B	C	D	E	N
R119-06C, R119-08C					
4.69 (119)	1.87 (47)	8.15 (207)	4.38 (111)	10.02 (255)	1.61 (41)
R119-10C, R119-12C					
4.94 (125)	1.81 (46)	8.53 (217)	4.94 (125)	10.34 (263)	1.99 (50.6)

inches (mm)

⚠ WARNING

Product rupture can cause serious injury.
Do not connect regulator to bottled gas.
Do not exceed maximum primary pressure rating.

Ordering Information

R	119	—	06	C	G	/**

Port Threads
- **– NPT**
- G BSPP

Port Size
- **06 3/4 Inch**
- **08 1 Inch**
- **10 1-1/4 Inch**
- **12 1-1/2 Inch**

Reduced Pressure Range
- **C 0-125 PSIG**
- D 0-250 PSIG

Options
- **– None**
- **G Gauge**
- K Non-Relieving
- X64** Fluorocarbon O-Rings and Diaphragm
- X80* Reverse Flow
- X7 Brass Bottom Plug

* Reverse flow for use downstream of control valves.
** Brass Bottom Plug Standard with X64 Option.

Engineering Level
- * Will be Entered at Factory

BOLD ITEMS ARE MOST POPULAR.

Parker Hannifin Corporation
Pneumatic Division
Richland, Michigan
www.wattsfluidair.com

Technical Information

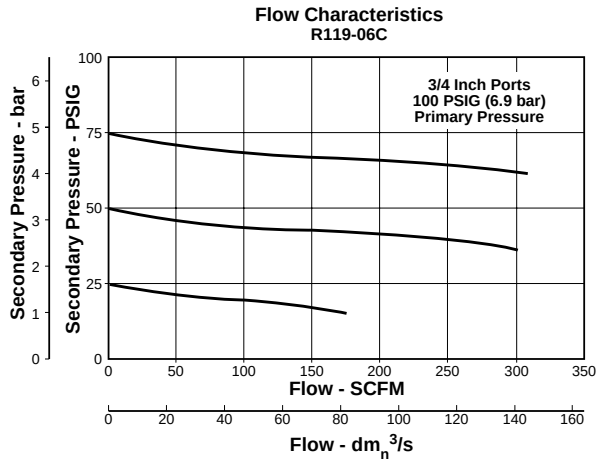

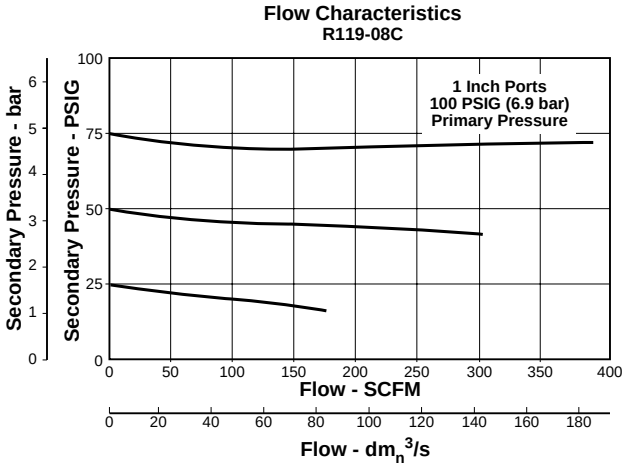

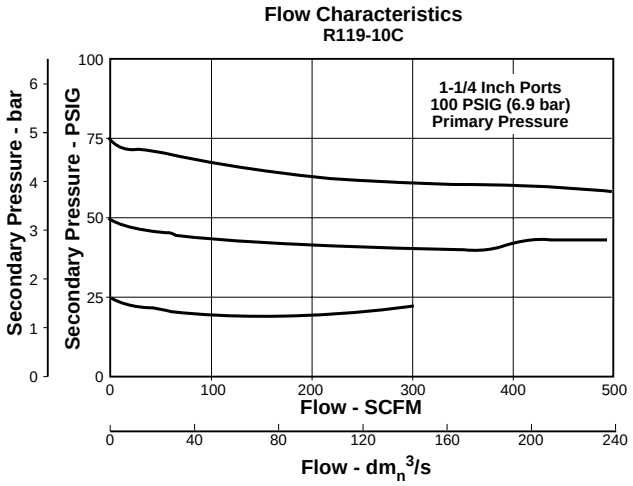

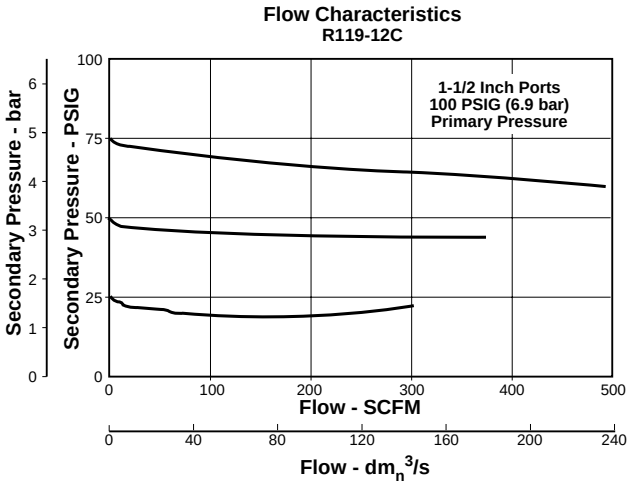

R119 Regulator Kits & Accessories

Gauges –

2" Dial Face

60 psig (0 to 4.1 bar) K4520N14060
160 psig (0 to 11.0 bar) K4520N14160
300 psig (0 to 20.0 bar) K4520N14300

1-3/4" Digital Round Face

160 psig (0 to 11.0 bar) K4517N14160D

Mounting Bracket Kit 18B57

Repair Kits –

Non-Relieving Diaphragm,
Valve Assembly (3/4", 1") RK118B

Non-Relieving Diaphragm,
Valve Assembly (1-1/4", 1-1/2") RK118D

Relieving Diaphragm,
Valve Assembly (3/4", 1") RK119B

Relieving Diaphragm,
Valve Assembly (1-1/4", 1-1/2") RK119D

For Fluorocarbon Repair Kits, add X64 to Kit Number suffix.

Specifications

Gauge Ports (2) ..... 1/4 Inch

Port Threads ..... 3/4, 1, 1-1/4, 1-1/2 Inch

Reduced Pressure Range ..... 2 to 125 PSIG (0.15 to 8.5 bar)

Supply Pressure ..... 300 PSIG Maximum (20.4 bar)

Temperature Rating ..... 40°F to 125°F (4.4°C to 52°C)

Weight –

R119-06, R119-08 ..... 6.2 lb. (2.81 kg) / Unit
25 lb. (11.34 kg) / 4-Unit Master Pack

R119-10, R119-12 ..... 7.2 lb. (3.27 kg) / Unit
29 lb. (13.15 kg) / 4-Unit Master Pack

Materials of Construction

Adjusting Screw, Springs ..... Steel

Body, Spring Cage ..... Zinc

Bottom Plug, Innervalve ..... Brass

Seals ..... Buna N

Parker Hannifin Corporation
Pneumatic Division
Richland, Michigan
www.wattsfluidair.com

09R Regulators – Hi-Flow

Features

- Piston design for reduced downtime
- High flow
- Balanced poppet for quick and accurate regulation
- Two full flow 1/4" gauge ports which can be used as additional outlets
- Self relieving piston standard
- High flow: 2" – 1000 SCFM§

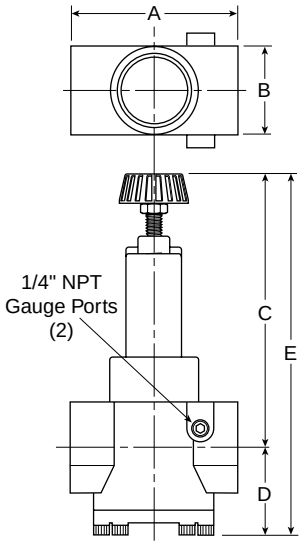

Port Size	NPT
Without Gauge	
2"	**09R813B***

Standard part numbers shown bold.
For other models refer to ordering information below.

§ SCFM = Standard cubic feet per minute at 100 PSIG inlet, 90 PSIG no flow secondary setting and 10 PSIG pressure drop.

09R Regulator Dimensions				
A	**B**	**C**	**D**	**E**
5.30 (135)	3.60 (91)	9.10 (231)	2.80 (71)	11.90 (302)

Inches (mm)

Ordering Information

09R	8	13	B	*

Port Size
8 2 Inch

Pressure Range
13 125 PSIG

Relief
B Relieving
M Non-Relieving

Engineering Level
* Will be Entered at Factory

BOLD ITEMS ARE MOST POPULAR.

Parker Hannifin Corporation
Pneumatic Division
Richland, Michigan
www.wattsfluidair.com

Technical Information

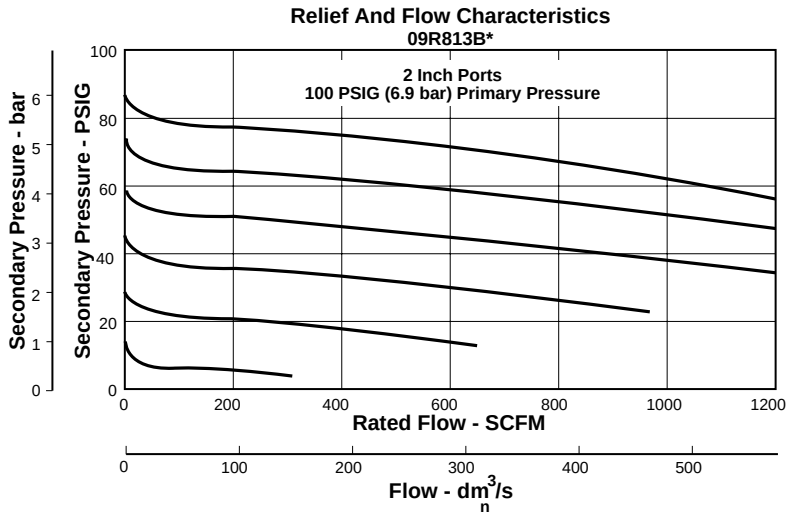

⚠ WARNING

Product rupture can cause serious injury.
Do not connect regulator to bottled gas.
Do not exceed maximum primary pressure rating.

⚠ CAUTION:

REGULATOR PRESSURE ADJUSTMENT – The working range of knob adjustment is designed to permit outlet pressures within their full range. Pressure adjustment beyond this range is also possible because the knob is not a limiting device. This is a common characteristic of most industrial regulators, and limiting devices may be obtained only by special design.
For best performance, regulated pressure should always be set by increasing the pressure up to the desired setting.

09R Regulator Kits & Accessories

Body Service Kit PS603

Gauges –
2" Dial Face
160 psig (0 to 11.0 bar) K4520N14160
300 psig (0 to 20.0 bar) K4520N14300

1-3/4" Digital Round Face
160 psig (0 to 11.0 bar) K4517N14160D

Mounting Bracket Kit PS605

Service Kit –
Non-Relieving PS604
Relieving PS626

Springs –
2-125 PSIG Range PS602

Specifications

Gauge Ports (2) ..... 1/4 Inch
(Can be used as additional Full Flow 1/4 Inch Outlet Ports)

Port Threads ..... 2 Inch

Primary Pressure Rating –
Maximum Primary Pressure ..... 250 PSIG (17.2 bar)

Secondary Pressure Range – ..... 10 to 125 PSIG (0.7 to 8.6 bar)

Temperature Rating ..... 32°F to 150°F (0°C to 66°C)

Weight ..... 10.82 lb. (53 kg)

Materials of Construction

Adjusting Stem & Springs ..... Steel

Body ..... Zinc Alloy, Die Cast

Bonnet, Piston Stem, Valve Poppet & Cap ..... Aluminum

Piston, Cap ..... Plastic

Seals ..... Nitrile

Parker Hannifin Corporation
Pneumatic Division
Richland, Michigan
www.wattsfluidair.com

R119 – Pilot Operated Regulators

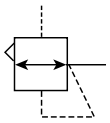

Features

- Adapted for control by a remote or distant small pilot regulator. Ideal for maximum capacity requirements in applications where units are not readily accessible
- High flow performance featuring rugged design for the most demanding applications
- Ideal for those installations calling for constant pressure with wide variation in flow
- Diaphragm operated design with balanced poppet and constant bleed pilot for quick and accurate regulation.
- Secondary aspiration plus balanced poppet provides quick response and accurate pressure regulation
- Reverse flow available
- High flow: 1/4" - 100 SCFM§
  3/8" - 110 SCFM§
  1/2" - 150 SCFM§

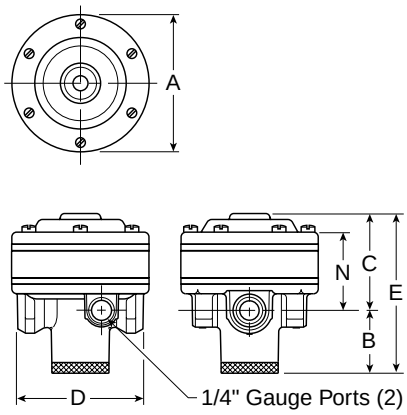

R119 Regulator Dimensions					
A	B	C	D	E	N
R119-02J, R119-03J					
3.00 (76)	1.38 (35)	1.98 (50)	2.74 (70)	3.55 (90)	1.57 (40)
R119-04J					
3.56 (90)	1.56 (40)	2.33 (59)	3.25 (83)	3.90 (99)	1.91 (49)

inches
(mm)

Port Size	NPT Relieving	BSPP Relieving
Without Gauge 0-125 PSIG Reduced Pressure		
1/4"	**R119-02J**	R119G02J
3/8"	**R119-03J**	R119G03J
1/2"	**R119-04J**	R119G04J

Standard part numbers shown bold.
For other models refer to ordering information below.

§ SCFM = Standard Cubic Feet Per Minute at 100 PSIG Inlet, 75 PSIG No Flow Secondary Setting, and 20 PSIG Pressure Drop.

⚠ WARNING

Product rupture can cause serious injury.
Do not connect regulator to bottled gas.
Do not exceed maximum primary pressure rating.

Ordering Information

R	119	—	02	J		/**

Port Threads
- **–** **NPT**
- G BSPP

Port Size
- **02 1/4 Inch**
- **03 3/8 Inch**
- **04 1/2 Inch**

Reduced Pressure Range
- **J Air Pilot Operated**

Options
- K Non-Relieving
- X64* Fluorocarbon O-Rings and Diaphragm
- X71 Non-Bleed Pilot (For use with Electronic Controllers)
- X7 Brass Bottom Plug

* Brass Bottom Plug Standard with X64 Option.

Engineering Level
- * Will be Entered at Factory

BOLD ITEMS ARE MOST POPULAR.

Parker Hannifin Corporation
Pneumatic Division
Richland, Michigan
www.wattsfluidair.com

Technical Information

Flow Characteristics
R119-02J

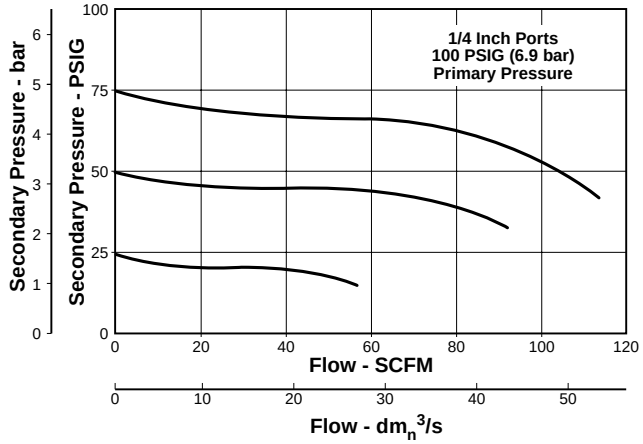

Flow Characteristics
R119-03J

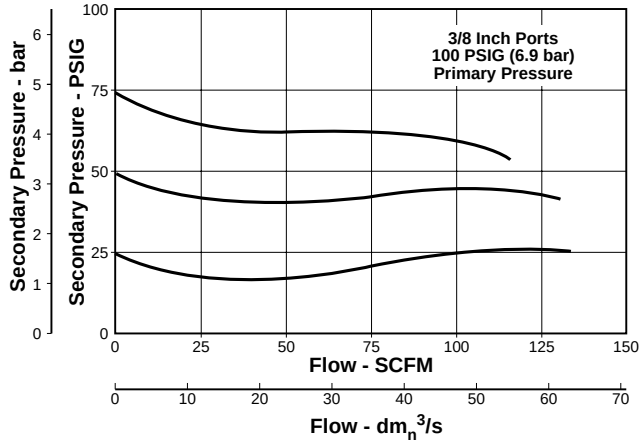

Flow Characteristics
R119-04J

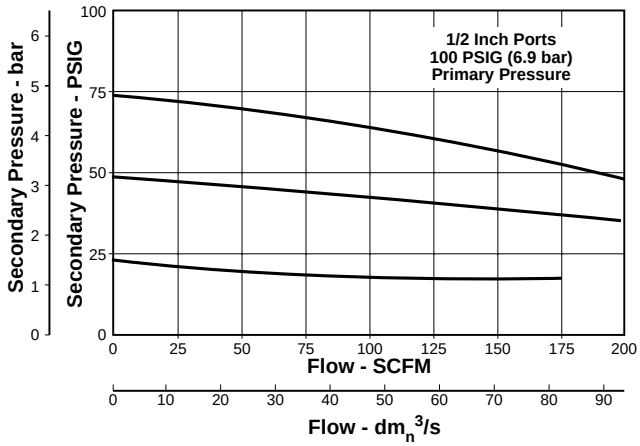

R119 Regulator Kits & Accessories

Gauges –

2" Dial Face

60 psig (0 to 4.1 bar) K4520N14060
160 psig (0 to 11.0 bar) K4520N14160
300 psig (0 to 20.0 bar) K4520N14300

1-3/4" Digital Round Face

160 psig (0 to 11.0 bar) K4517N14160D

Repair Kits –

Non-Relieving Diaphragm,
Valve Assembly (1/2") RK118X20A

Non-Relieving Diaphragm,
Valve Assembly (1/4", 3/8") RK118X20Y

Relieving Diaphragm,
Valve Assembly (1/2") RK119X20A

Relieving Diaphragm,
Valve Assembly (1/4", 3/8") RK119X20Y

For Fluorocarbon Repair Kits, add X64 to Kit Number suffix.

For Non-Bleed Pilot Repair Kits, add X71 to Kit Number suffix.

Specifications

Gauge Ports (2) ..... 1/4 Inch

Port Threads ..... 1/4, 3/8, 1/2 Inch

Pilot Port –

1/4 & 3/8" Threads ..... 1/8"
1/2" Threads ..... 1/4"

Reduced Pressure Range –

Adjustable to within 5 to 7 PSIG of Supply Pressure

Supply Pressure ..... 300 PSIG Maximum (20.4 bar)

Air Consumption –

Constant bleed from air pilot chamber: approx. 0.17 SCFM (10 SCFH)

Temperature Rating ..... 40°F to 125°F (4.4°C to 52°C)

Weight –

R119-02J, R119-03J ..... 1.6 lb. (0.73 kg) / Unit
19 lb. (8.62 kg) / 12-Unit Master Pack

R119-04J ..... 2.6 lb. (1.18 kg) / Unit
21 lb. (9.53 kg) / 8-Unit Master Pack

Materials of Construction

Body, Ring, Top Plate ..... Zinc

Bottom Plug ..... Nylon

Innervalve ..... Brass

Seals ..... Buna N

Parker Hannifin Corporation
Pneumatic Division
Richland, Michigan
www.wattsfluidair.com

R119 – Pilot Operated Regulators

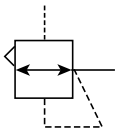

Features

- Adapted for control by a remote or distant small pilot regulator. Ideal for maximum capacity requirements in applications where units are not readily accessible
- High flow performance featuring rugged design for the most demanding applications
- Ideal for those installations calling for constant pressure with wide variation in flow
- Diaphragm operated design with balanced poppet and constant bleed pilot for quick and accurate regulation
- Secondary aspiration plus balanced poppet provides quick response and accurate pressure rgulation
- Reverse flow version available
- High flow: 3/4" & 1" – 300 SCFM§
  1-1/4" & 1-1/2" – 500 SCFM§

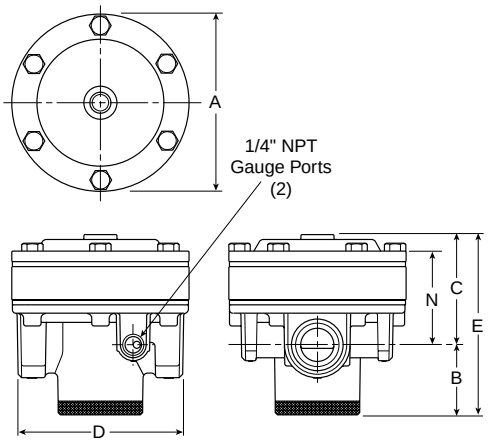

R119-06J, R119-08J Pilot Regulator Dimensions					
A	**B**	**C**	**D**	**E**	**N**
4.72 (120)	1.87 (47)	2.94 (75)	4.38 (111)	4.81 (122)	2.47 (63)
R119-10J, R119-12J Pilot Regulator Dimensions					
A	**B**	**C**	**D**	**E**	**N**
4.94 (125)	1.81 (46)	3.32 (84)	4.94 (125)	5.13 (130)	2.88 (736)

inches (mm)

Port Size	NPT Relieving
Without Gauge 0-125 PSIG Reduced Pressure	
3/4"	**R119-06J**
1"	**R119-08J**
1-1/4"	**R119-10J**
1-1/2"	**R119-12J**

Standard part numbers shown bold.
For other models refer to ordering information below.

§ SCFM = Standard Cubic Feet Per Minute at 100 PSIG Inlet, 75 PSIG No Flow Secondary Setting, and 20 PSIG Pressure Drop.

⚠ WARNING

Product rupture can cause serious injury.
Do not connect regulator to bottled gas.
Do not exceed maximum primary pressure rating.

Ordering Information

R	119	—	06	J		/**

Port Threads
- **–** **NPT**
- G BSPP

Port Size
- **06 3/4 Inch**
- **08 1 Inch**
- **10 1-1/4 Inch**
- **12 1-1/2 Inch**

Reduced Pressure Range
- **J Air Pilot Operated**

Options
- K Non-Relieving
- X64* Fluorocarbon O-Rings and Diaphragm
- X71 Non-Bleed Pilot (For use with Electronic Controllers)

* Brass Bottom Plug Standard with X64 Option.

Engineering Level
- * Will be Entered at Factory

BOLD ITEMS ARE MOST POPULAR.

Parker Hannifin Corporation
Pneumatic Division
Richland, Michigan
www.wattsfluidair.com

Technical Information

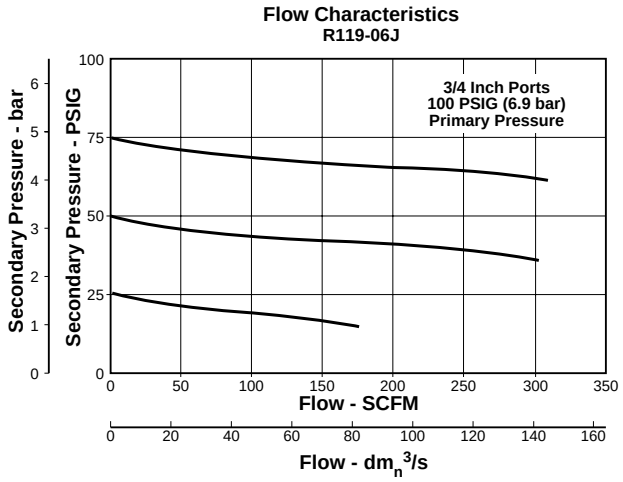

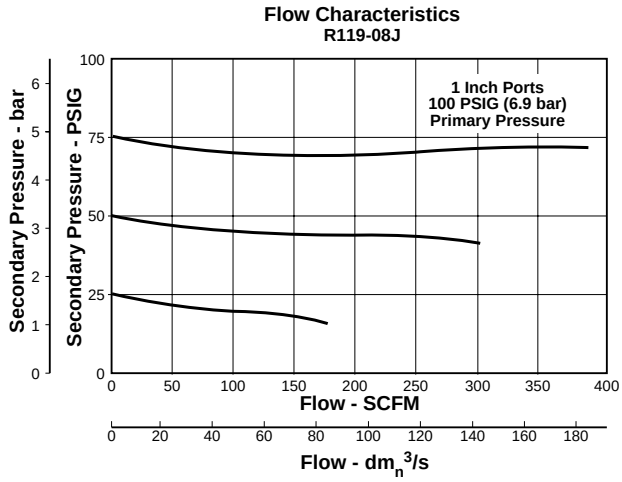

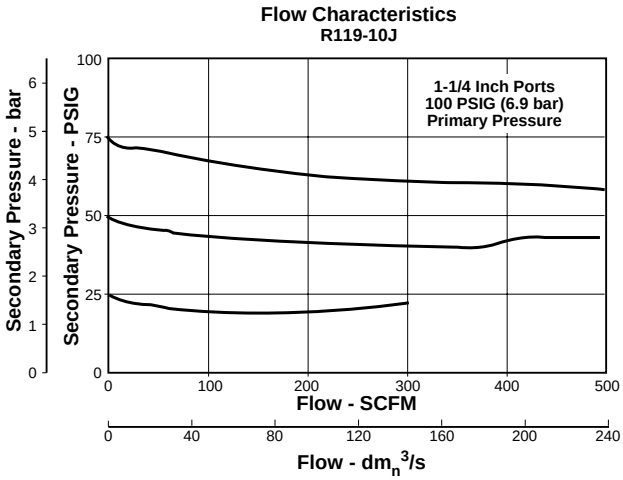

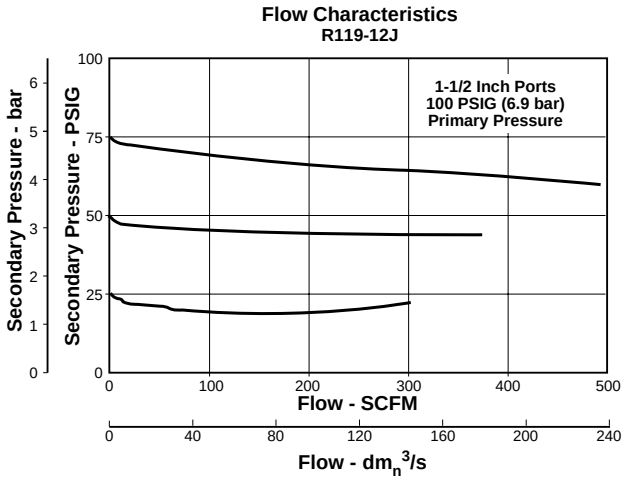

R119 Regulator Kits & Accessories

Gauges –

2" Dial Face

60 psig (0 to 4.1 bar) K4520N14060
160 psig (0 to 11.0 bar) K4520N14160
300 psig (0 to 20.0 bar) K4520N14300

1-3/4" Digital Round Face

160 psig (0 to 11.0 bar) K4517N14160D

Repair Kits –

Non-Relieving Diaphragm,
Valve Assembly (3/4", 1") RK118X20B

Non-Relieving Diaphragm,
Valve Assembly (1-1/4", 1-1/2") RK118X20D

Relieving Diaphragm,
Valve Assembly (3/4", 1") RK119X20B

Relieving Diaphragm,
Valve Assembly (1-1/4", 1-1/2") RK119X20D

For Fluorocarbon Repair Kits, add X64 to Kit Number suffix.

For Non-Bleed Pilot Repair Kits, add X71 to Kit Number suffix.

Specifications

Gauge Ports (2) ..... 1/4 Inch

Port Threads ..... 3/4, 1, 1-1/4, 1-1/2 Inch

Reduced Pressure Range –
Adjustable to Within 5 to 7 PSIG of Supply Pressure

Supply Pressure ..... 300 PSIG Maximum (20.4 bar)

Air Consumption –
Constant Bleed from Air Pilot Chamber:
Approximately 0.17 SCFM (10 SCFH)

Temperature Rating ..... 40°F to 125°F (4.4°C to 52°C)

Weight –

R119-06J, R119-08J ..... 5.2 lb. (2.36 kg) / Unit
42 lb. (19.05 kg) / 8-Unit Master Pack

R119-10J, R119-12J ..... 5.6 lb. (2.54 kg) / Unit
46 lb. (20.87 kg) / 8-Unit Master Pack

Materials of Construction

Body, Ring, Top Plate ..... Zinc

Bottom Plug, Innervalve ..... Brass

Seals ..... Buna N

Parker Hannifin Corporation
Pneumatic Division
Richland, Michigan
www.wattsfluidair.com

R119 – Pilot Operated Regulators

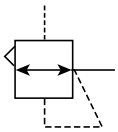

Features

- Adapted for control by a remote or distant small pilot regulator. Ideal for maximum capacity requirements in applications where units are not readily accessible
- High flow performance featuring rugged design for the most demanding applications
- Ideal for those installations calling for constant pressure with wide variation in flow
- Piston operated design with balanced poppet and dual constant bleed for quick and accurate regulation
- High flow: 2" & 2-1/2" – 1800 SCFM§

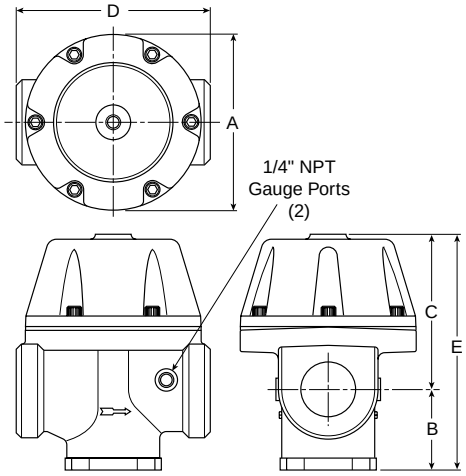

Port Size	NPT
	Relieving
Without Gauge 0-125 PSIG Reduced Pressure	
2"	**R119-16J**
2-1/2"	**R119-20J**

Standard part numbers shown bold.
For other models refer to ordering information below.

§ SCFM = Standard Cubic Feet Per Minute at 100 PSIG Inlet, 75 PSIG No Flow Secondary Setting, and 20 PSIG Pressure Drop.

R119-16J, R119-20J Pilot Regulator Dimensions				
A	B	C	D	E
6.63 (168)	3.09 (79)	7.78 (147)	7.31 (185)	10.87 (276)

inches (mm)

⚠ WARNING

Product rupture can cause serious injury.
Do not connect regulator to bottled gas.
Do not exceed maximum primary pressure rating.

Ordering Information

R	119	—	16	J

Port Threads
– NPT
G BSPP

Port Size
16 2 Inch
20 2-1/2 Inch

Reduced Pressure Range
J Air Pilot Operated

NOTE: Non-Relieving Not Available.

BOLD ITEMS ARE MOST POPULAR.

Parker Hannifin Corporation
Pneumatic Division
Richland, Michigan
www.wattsfluidair.com

Technical Information

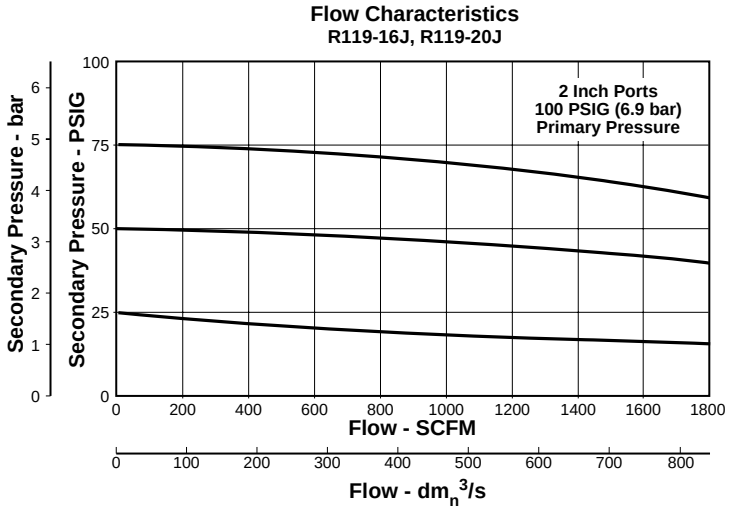

R119 Regulator Kits & Accessories

Gauges –

2" Dial Face

60 psig (0 to 4.1 bar)..... K4520N14060
160 psig (0 to 11.0 bar).....K4520N14160
300 psig (0 to 20.0 bar)..... K4520N14300

1-3/4" Digital Round Face

160 psig (0 to 11.0 bar)..... K4517N14160D

Repair Kits –

Piston Type Regulation (2", 2-1/2") RK119G

Piston & Cylinder Kit.....SA119-0291

Cylinder Only Kit.....118F29

Specifications

Gauge Ports (2) .....1/4 Inch
(Can be used for Full Flow)
High Pressure Outlet for Pilot (Not seen in photo) .....1/4 Inch

Port Threads .....2, 2-1/2 Inch

Reduced Pressure Range –
Adjustable to Within 5 to 7 PSIG of Supply Pressure

Supply Pressure .....300 PSIG Maximum (20.4 bar)

Air Consumption –
Constant Bleed from Air Pilot Chamber:
Approximately 0.17 SCFM (10 SCFH)

Constant Bleed from Reduced Pressure:
Approximately 0.17 SCFM (10 SCFH)

Temperature Rating ..... 40°F to 120°F (4.4°C to 48.9°C)

Weight –
R119-16J, R119-20J ..... 11 lb. (4.99 kg) / Unit
12 lb. (5.44 kg) / 1-Unit Master Pack

Materials of Construction

Body, Piston.....Aluminum

Seals.....Buna N

Innervalve.....Brass & Stainless

Parker Hannifin Corporation
Pneumatic Division
Richland, Michigan
www.wattsfluidair.com

Filter / Regulators

- Pipe Sizes 1/8 thru 1-1/2 Inch
- Flows to 200 SCFM
- Pressures to 250 psig

Integral Filter / Regulators are an excellent choice where accurate pressure regulation and high moisture removal efficiency are required in a space saving package.

Filter / Regulator Selection

1. Determine maximum system flow requirements.
2. Determine maximum allowable pressure drop at rated flow in SCFM.
3. Refer to flow chart and select filter/regulator by choosing the curve that offers minimum pressure drop at desired flow in SCFM.

Reading Flow Charts to Size Filter / Regulators

Once the required flow is determined for a pneumatic application the regulator or filter/regulator can be selected by using the flow chart. The chart serves two different purposes. To read the flow, use the right side of the chart. To read the relief characteristics use the left side of the chart. When reading the flow chart, first determine the secondary pressure that will be used. Find the appropriate pressure curve on the graph. Given an acceptable pressure drop for an application, follow the flow curve until it intersects the pressure drop point. This will give the flow at that particular pressure drop.

⚠ WARNING

Product rupture can cause serious injury.
Do not connect regulator to bottled gas.
Do not exceed maximum primary pressure rating.

⚠ CAUTION:

REGULATOR PRESSURE ADJUSTMENT – The working range of knob adjustment is designed to permit outlet pressures within their full range. Pressure adjustment beyond this range is also possible because the knob is not a limiting device. This is a common characteristic of most industrial regulators, and limiting devices may be obtained only by special design.
For best performance, regulated pressure should always be set by increasing the pressure up to the desired setting.

⚠ Warning

The plastic material used to manufacture the plastic bowls, and the sight gauge on metal bowls, may be attacked by certain chemicals. Do not use this lfilter regulator on systems with air supplied by a compressor lubricated with synthetic oils or oils containing phosphate esters or chlorinated hydrocarbons. These oils can carry over into the air lines and chemically attack and possibly rupture the bowl or sight gauge. Also, do not expose the bowl or sight gauge to materials such as carbon tetrachloride, trichlorethylene, acetone, paint thinner, cleaning fluids, or other harmful materials, for they too will cause the plastic to craze and/or rupture. For use in environments where these, or any, chemicals may be present, consult the factory for approval.

Parker Hannifin Corporation
Pneumatic Division
Richland, Michigan
www.wattsfluidair.com

Filter / Regulators

Turning the adjusting knob clockwise applies a load to control spring which forces the piston / diaphragm and valve poppet assembly to move downward allowing filtered air to flow through the seat area created between the poppet assembly and the seat. “First stage filtration” begins when air pressure supplied to the inlet port is directed through deflector plate causing a swirling centrifugal action forcing liquids and coarse particles to the inner bowl wall and down below the lower baffle to the quiet zone. After liquids and large particles are removed in the first stage of filtration “second stage filtration” occurs as air flows through element where smaller particles are filtered out and retained. The air flow now passes through seat area to the outlet port of the unit. Pressure in the downstream line is sensed below the piston / diaphragm and offsets the load of control spring. When downstream pressure reaches the set-point, poppet valve assembly and piston / diaphragm move upward closing seat area. Should downstream pressure exceed the desired regulated pressure, the excess pressure will cause the piston / diaphragm to move upward opening vent hole venting the excess pressure to atmosphere through the hole in the bonnet. (This occurs in the standard relieving type regulator only.)

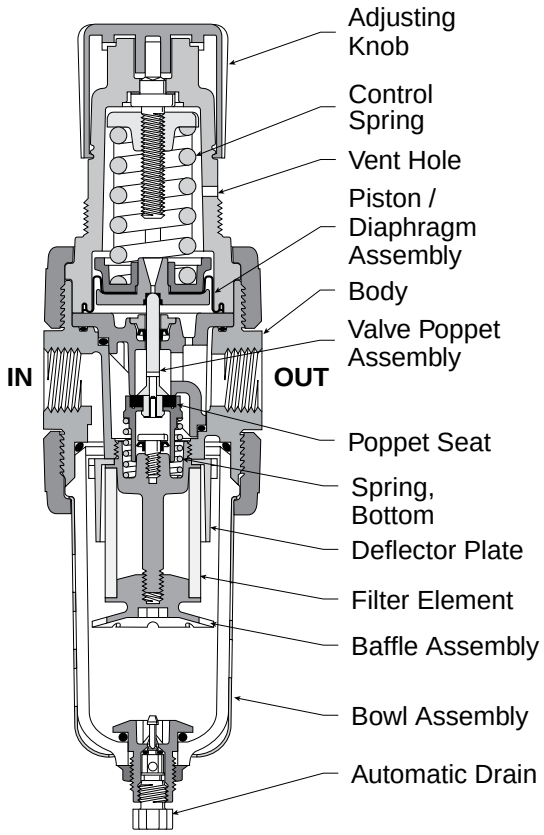

Semi Automatic Drain

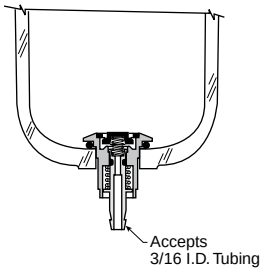

(Overnight Drain)

This drain offers a semi-automatic function when there is a differential pressure in the filter which occurs when system pressure is shut off. The drain can also be used manually by gripping it with your fingertips and pushing upward.

Automatic Pulse Drain

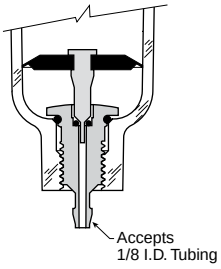

(Spitter Drain)

The diaphragm in this drain pulses when there is a pressure differential such as a valve cycling or cylinder stroking downstream. This action flexes the diaphragm and allows the filter to drain the entrapped water.

Automatic Float Drain

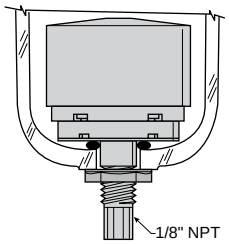

The float internal to this drain rises with increased liquid level. When the float rises, it opens a seat area allowing the trapped liquids to drain through the bottom.
A manual override can be pushed in the bottom of the drain to unseat the float if particulates create a block.

Parker Hannifin Corporation
Pneumatic Division
Richland, Michigan
www.wattsfluidair.com

14E Filter / Regulator – Miniature

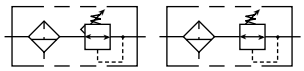

Features

- Excellent water removal efficiency
- Unbalanced poppet standard
- Solid control piston for extended life
- Space saving package offers both filter and regulator features in one integral unit
- Non-rising adjustment knob
- Two full flow 1/8" gauge ports
- High flow: 1/8" – 16 SCFM§
  1/4" – 18 SCFM§

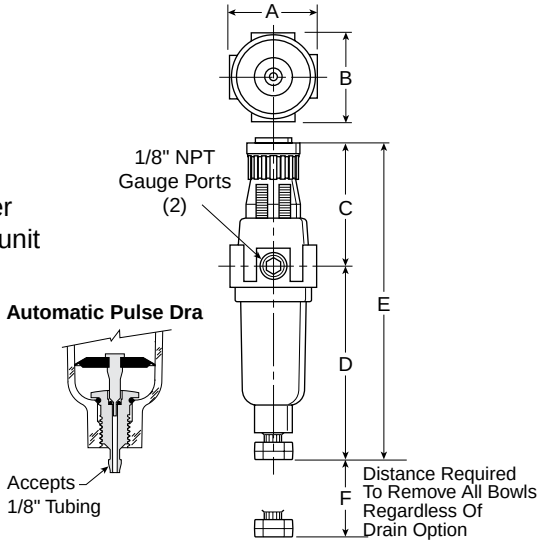

Port Size	NPT	
	Twist Drain	Automatic Pulse Drain
Poly Bowl‡		
1/8"	**14E01B13F***	**14E05B13F***
1/4"	**14E11B13F***	**14E15B13F***
Metal Bowl		
1/8"	**14E03B13F***	**14E07B13F***
1/4"	**14E13B13F***	**14E17B13F***

Standard part numbers shown bold.
For other models refer to ordering information below.

NOTE: 1.218 Dia. (31mm) hole required for panel mounting.

‡ For polycarbonate bowl see Caution on page inside cover.

§ SCFM = Standard cubic feet per minute at 100 PSIG inlet, 90 PSIG no flow secondary setting and 10 PSIG pressure drop.

14E Filter / Regulator Dimensions

A	B	C
1.62 (41)	1.58 (40)	2.42 (61)
D	**D†**	**E**
3.79 (96)	3.64 (92)	6.21 (158)
E†	**F**	
6.06 (154)	1.60 (41)	

Inches (mm)
† With Auto Drain

Ordering Information

BOLD ITEMS ARE MOST POPULAR.

14E	1	1	B	13	F	*			

Port Size

0	**1/8 Inch**
1	**1/4 Inch**

Elements

A	40 Micron
B	**5 Micron**
Z	Adsorber

Relief

F	**Relieving**
G	Non-Relieving
H	Low Temp. Relieving

Port Type

Blank	NPT
1	BSPP
2	BSPT

Preset / Pressure Limited

Blank	None
XXX*	Preset Pressure
XXX*	Pressure Limited

* Available Preset / Pressure Limited Range, 10 to 90 PSIG in 5 PSIG increments. For higher pressures, contact factory.
(Example: 065 = 65 PSIG)

Bowl Options

Polycarbonate Bowl
1 Twist Drain
5 Automatic Drain
Metal Bowl
3 Twist Drain
7 Automatic Drain

Pressure Range

Without Gauge	With Gauge
10 30 PSIG	15 30 PSIG
11 60 PSIG	16 60 PSIG
12 15 PSIG	17 15 PSIG
13 125 PSIG	18 125 PSIG

Engineering Level

*	Will be Entered at Factory

Options

Blank	No Options
L†	Preset Non-Adjustable
P†	Preset Adjustable
S†	Pressure Limiter Max. Adjustable
T†	Pressure Limiter Max.

† Inlet Pressure is 100 PSIG. For other pressures, contact factory.

Spring Type by Preset / Limited Pressure:
For Preset / Limited Pressure 10 to 25 use 30 PSI Spring
For Preset / Limited Pressure 26 to 50 use 60 PSI Spring
For Preset / Limited Pressure 51 to 90 use 125 PSI Spring

Parker Hannifin Corporation
Pneumatic Division
Richland, Michigan
www.wattsfluidair.com

Technical Information

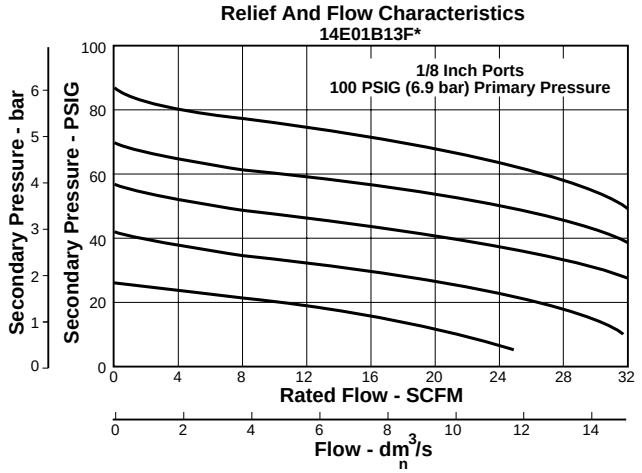

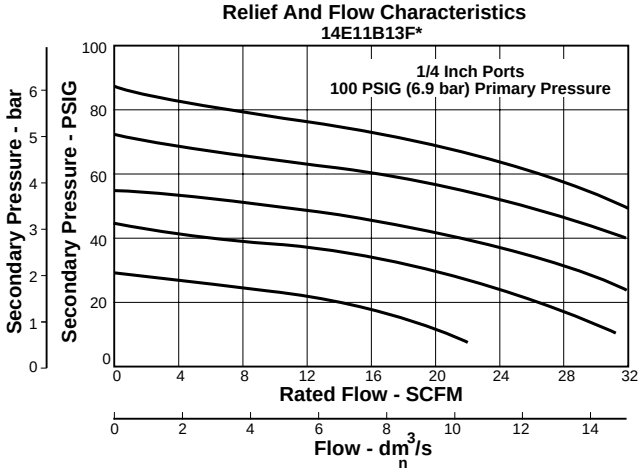

⚠ WARNING

Product rupture can cause serious injury.
Do not connect regulator to bottled gas.
Do not exceed maximum primary pressure rating.

⚠ CAUTION:

REGULATOR PRESSURE ADJUSTMENT – The working range of knob adjustment is designed to permit outlet pressures within their full range. Pressure adjustment beyond this range is also possible because the knob is not a limiting device. This is a common characteristic of most industrial regulators, and limiting devices may be obtained only by special design.
For best performance, regulated pressure should always be set by increasing the pressure up to the desired setting.

14E Filter / Regulator Kits & Accessories

Bowl Kits –
Polycarbonate Bowl – Automatic Drain PS408B
Twist Drain PS404
Metal Bowl – Automatic Drain PS451B
Twist Drain PS447B

Filter Element Kits – 40 Micron PS401
5 Micron PS403
Adsorber PS452

Gauges – 30 PSIG (0 to 2.1 bar) K4515N18030
60 PSIG (0 to 4.1 bar) K4515N18060
160 PSIG (0 to 11.0 bar) K4515N18160

Mounting Bracket Kit* (Includes Panel Mount Nut) PS417B

Panel Mount Nut* P78652

Poppet / Piston Kits – Unbalanced Non-Relieving PS428
Unbalanced Relieving PS426

Springs – 1- 15 PSIG Range (Yellow) P01176
1- 30 PSIG Range (Black) P01175
1- 60 PSIG Range (White) P01174
2- 125 PSIG Range (Gold) P01173

Specifications

Automatic Pulse Drain Tube Barb ..... 1/8 Inch
Bowl Capacity ..... 1 Ounce
Gauge Ports (2) (Can be used for Full Flow) ..... 1/8 Inch
Port Threads ..... 1/8, 1/4 Inch

*Tighten panel mount nut 2.8 to 3.4 Nm (25 to 30 in-lbs) of torque.

Pressure & Temperature Ratings –
Polycarbonate Bowl –
0 to 150 PSIG (0 to 10.3 bar), 32°F to 125°F (0°C to 52°C)
Metal Bowl –
0 to 250 PSIG (0 to 17.2 bar), 32°F to 175°F (0°C to 80°C)

Secondary Pressure Ranges –
Standard Pressure ..... 2 to 125 PSIG (0 to 8.6 bar)
Medium Pressure ..... 1 to 30 PSIG (0 to 2.1 bar)
Medium Pressure ..... 1 to 60 PSIG (0 to 4.1 bar)
Low Pressure ..... 1 to 15 PSIG (0 to 1 bar)

Weight ..... 0.4 lb. (0.18 kg)

Materials of Construction

Adjusting Nut ..... Brass
Adjusting Stem & Spring ..... Steel
Body ..... Zinc
Bonnet, Knob, Seat, Piston, Holder & Deflector ..... Plastic
Bowls Available –
Transparent ..... Polycarbonate
Metal (Without Sight Gauge) ..... Zinc
Drains – ..... Manual – Twist Type
Body & Stem ..... Plastic
Seals ..... Nitrile
Automatic – Pulse Type
Piston & Seals ..... Nitrile
Stem, Seat, Adaptor & Washers ..... Aluminum
Filter Elements – ..... 5 Micron (Standard)
Plastic –
40 Micron (Optional) ..... Plastic
Adsorber (Optional) ..... Activated Charcoal
Seals ..... Nitrile

Parker Hannifin Corporation
Pneumatic Division
Richland, Michigan
www.wattsfluidair.com

B34 Filter / Regulator – Miniature

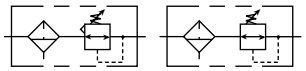

Features

- Excellent water removal efficiency
- Diaphragm operated for fast operation
- Large diaphragm to valve area for precise regulation and high flow capacity
- Balanced valve design for precise regulation
- Space saving package offers both filter and regulator features in one integral unit
- Non-rising adjustment knob
- High flow: 1/8" – 12 SCFM§
  1/4" – 12 SCFM§

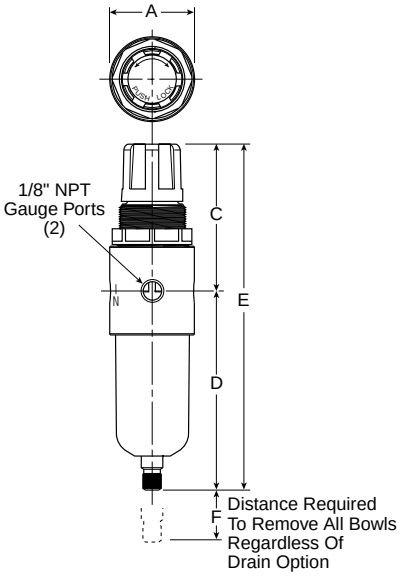

Port Size	NPT
	Manual Twist Drain
Poly Bowl‡	
1/8"	**B344-01AGC**
1/4"	**B344-02AGC**
Metal Bowl without Sight Gauge	
1/8"	**B344-01DGC**
1/4"	**B344-02DGC**

Standard part numbers shown bold.
For other models refer to ordering information below.

NOTE: 1.218 Dia. (31mm) hole required for panel mounting.

‡ For polycarbonate bowl see Caution on page inside cover.

§ SCFM = Standard cubic feet per minute at 100 PSIG inlet, 75 PSIG no flow secondary setting and 25% pressure drop.

B34 Filter / Regulator Dimensions		
A	**C**	**D**
1.54 (39.2)	2.68 (68.1)	3.63 (92.1)
E	**F**	
6.31 (160.2)	1.65 (41.9)	

Inches (mm)
† With Auto Drain

Standard part numbers shown bold.
For other models refer to ordering information below.

NOTE: 1.218 Dia. (31mm) hole required for panel mounting.

‡ For polycarbonate bowl see Caution on inside cover.

§ SCFM = Standard cubic feet per minute at 100 PSIG inlet, 75 PSIG no flow secondary setting and 25% pressure drop.

Ordering Information

B34	4	—	02	A	G	C	

Number of Ports
- 2 2 Ports
- **4 4 Ports**

Port Threads
- **– NPT**
- G BSPP

Port Size
- **01 1/8 Inch**
- **02 1/4 Inch**

Bowl
- **A Polycarbonate Bowl**
- D Metal without Sight Gauge

Elements
- G 5 Micron

Reduced Pressure Range
- A 0-25 PSIG
- B 0-60 PSIG
- **C 0-125 PSIG**

Options
- **Blank None**
- G Gauge
- K Non-Relieving
- P Panel Mount (Plastic)
- S Automatic Pulse Drain

BOLD ITEMS ARE MOST POPULAR.

Parker Hannifin Corporation
Pneumatic Division
Richland, Michigan
www.wattsfluidair.com

Technical Information

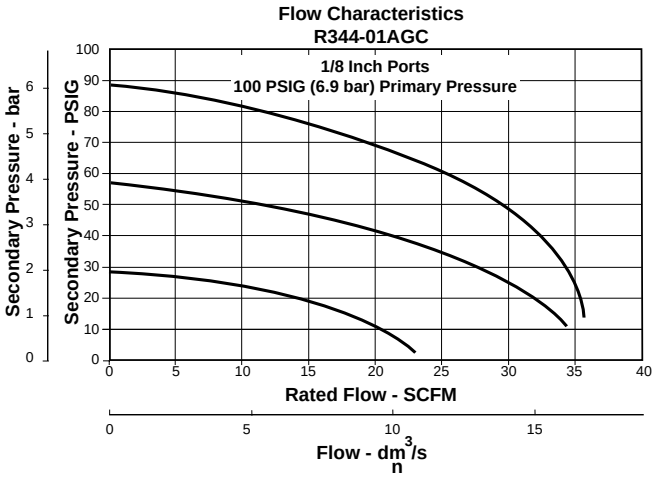

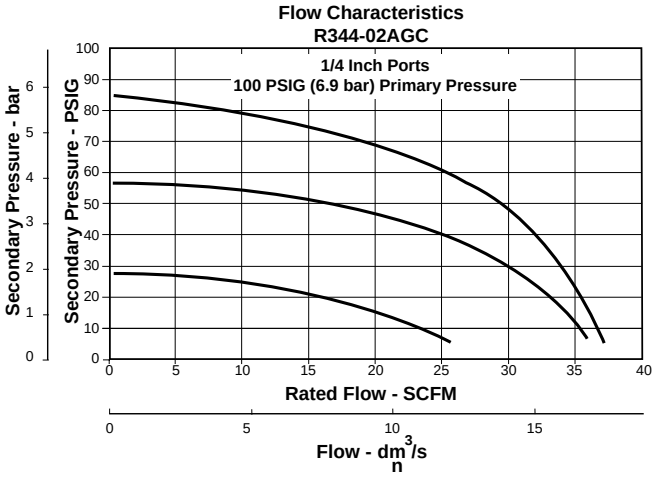

⚠ WARNING

Product rupture can cause serious injury.
Do not connect regulator to bottled gas.
Do not exceed maximum primary pressure rating.

⚠ CAUTION:

REGULATOR PRESSURE ADJUSTMENT – The working range of knob adjustment is designed to permit outlet pressures within their full range. Pressure adjustment beyond this range is also possible because the knob is not a limiting device. This is a common characteristic of most industrial regulators, and limiting devices may be obtained only by special design.
For best performance, regulated pressure should always be set by increasing the pressure up to the desired setting.

B34 Filter / Regulator Kits & Accessories

Adjusting Knob RRP-16-005-000

Bowl Kits –
- Zinc (D) BK505Y
- Zinc with Automatic Pulse Drain (D) BK505SY
- Polycarbonate (A) BK504Y
- Polycarbonate with Automatic Pulse Drain (A) BK504SY

Drain Kits –
- Automatic Pulse Drain (Maximum Pressure = 175 PSIG) RK504SY

Filter Element Kits –
- 5 Micron (All) FRP-96-729

Gauges –
- 1-1/2" Dial Size, 1/8" Back Connection 0 to 60 PSIG (0 to 400 kPa) K4515N18060
- 1-1/2" Dial Size, 1/8" Back Connection 0 to 160 PSIG (0 to 1100 kPa) K4515N18160

Mounting Bracket Kit (Includes Plastic Panel Nut) SA161X57

Panel Mount Nut –
- Plastic R05X51-P
- Aluminum R05X51-A

Repair Kits –
- Non-Relieving Diaphragm, Valve Assembly (All) GRP-96-726
- Relieving Diaphragm, Valve Assembly (All) GRP-96-725

Springs – 0-25 ..... GRP-95-111
- 0-60 ..... GRP-96-718
- 0-125 ..... GRP-96-717

Specifications

Bowl Capacity ..... 1 Ounce

Gauge Ports (2) ..... 1/8 Inch

Maximum Pressure –
- Zinc Bowl (D) ..... 0 to 300 PSIG
- Polycarbonate Bowl (A) ..... 0 to 150 PSIG

Reduced Pressure Range –
- 0 to 25 PSIG ..... (0 to 1.7 bar) (A)
- 0 to 60 PSIG ..... (0 to 4.1 bar) (B)
- 2 to 125 PSIG ..... (0.15 to 8.5 bar) (C)

Temperature Rating ..... 40°F to 125°F (4.4°C to 52°C)

Port Threads ..... 1/8 &1/4 Inch

Weight –
- Zinc Bowl (D) ..... 0.6 lb. (0.27 kg) / Unit
  12 lb. (5.44 kg) / 24-Unit Master Pack
- Polycarbonate Bowl (A) ..... 0.3 lb. (0.14 kg) / Unit
  6 lb. (2.72 kg) / 24-Unit Master Pack

Materials of Construction

Adjusting Knob ..... Acetal

Body ..... Aluminum

Bowls –
- Polycarbonate (A) ..... Polycarbonate
- Metal (D) ..... Zinc
  Zinc with Automatic Pulse Drain

Elastomers ..... Buna N

Filter Element ..... Sintered Polyethylene

Filter Retainer, Vane Plate ..... Acetal

Innervalve, Diaphragm, Button, Drain ..... Brass

Parker Hannifin Corporation
Pneumatic Division
Richland, Michigan
www.wattsfluidair.com

B548 Filter / Regulator – Miniature

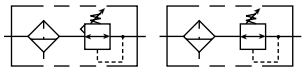

Features

- Excellent water removal efficiency
- Unbalanced poppet standard
- Solid control piston for extended life
- Space saving package offers both filter and regulator features in one integral unit
- Non-rising adjustment knob
- High flow: 12 SCFM §

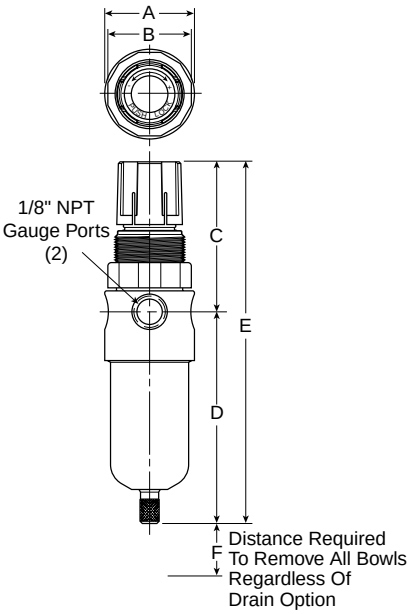

Port Size	NPT
	Manual Twist Drain
Poly Bowl‡	
1/8"	**B548-01AHC**
1/4"	**B548-02AHC**
Metal Bowl without Sight Gauge	
1/8"	**B548-01DHC**
1/4"	**B548-02DHC**

Standard part numbers shown bold.
For other models refer to ordering information below.

NOTE: 1.218 Dia. (31mm) hole required for panel mounting.

‡ For polycarbonate bowl see Caution on page inside cover.

§ SCFM = Standard cubic feet per minute at 100 PSIG inlet, 75 PSIG no flow secondary setting and 25% pressure drop.

B548 Filter / Regulator Dimensions		
A	**B**	**C**
1.55 (39.2)	4.44 (36.5)	2.58 (65.6)
D	**E**	**F**
6.23 (158.2)	3.81 (96.7)	.86 (21.9)

Inches (mm)
† With Auto Drain

Ordering Information

B	548	—	02	A	H	C		/**

Port Threads
- **– NPT**
- G BSPP

Port Size
- **01 1/8 Inch**
- **02 1/4 Inch**

Bowl
- **A Polycarbonate Bowl**
- D Metal without Sight Gauge

Elements
- G 5 Micron
- **H 20 Micron**

Reduced Pressure Range
- A 0-25 PSIG
- B 0-60 PSIG
- **C 0-125 PSIG**

Options
- G Gauge
- K Non-Relieving
- P Panel Mount (Plastic)
- S Automatic Pulse Drain
- T Tamperproof
- U Semi-Auto Drain
- X64 Fluorocarbon O-rings & Diaphragm
- X33* Polyurethane Bowl

* Add .65" to overall length.

Engineering Change Designator
- Will be entered at factory.

BOLD ITEMS ARE MOST POPULAR.

Parker Hannifin Corporation
Pneumatic Division
Richland, Michigan
www.wattsfluidair.com

Technical Information

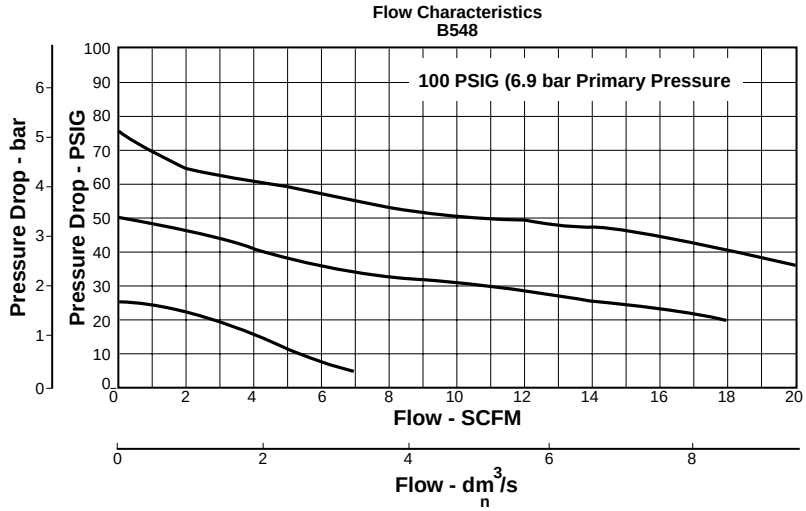

⚠ WARNING

Product rupture can cause serious injury.
Do not connect regulator to bottled gas.
Do not exceed maximum primary pressure rating.

⚠ CAUTION:

REGULATOR PRESSURE ADJUSTMENT – The working range of knob adjustment is designed to permit outlet pressures within their full range. Pressure adjustment beyond this range is also possible because the knob is not a limiting device. This is a common characteristic of most industrial regulators, and limiting devices may be obtained only by special design.
For best performance, regulated pressure should always be set by increasing the pressure up to the desired setting.

B548 Filter / Regulator Kits & Accessories

Bowl Kits –
- Zinc (D) BK505Y
- Zinc with Automatic Pulse Drain (D) BK505SY
- Polycarbonate (A) BK504Y
- Polycarbonate with Automatic Pulse Drain (A) BK504SY

Cage Kits (All) CKR364Y

Drain Kits –
- Automatic Pulse Drain (Maximum Pressure = 175 PSIG) RK504SY
- Semi-Automatic "Overnight" Drain ..... SA602A7 (Drains automatically under zero pressure)

Filter Element Kits –
- 20 Micron (All) EK504Y
- 5 Micron (All) EK504VY

Gauges –
- 1-1/2" Dial Size, 1/8" Back Connection 0 to 60 PSIG (0 to 400 kPa) K4515N18060
- 1-1/2" Dial Size, 1/8" Back Connection 0 to 160 PSIG (0 to 1100 kPa) K4515N18160

Mounting Bracket Kit (Includes Plastic Panel Nut) SA161X57

Panel Mount Nut –
- Plastic R05X51-P
- Aluminum R05X51-A

Repair Kits –
- Non-Relieving Diaphragm, Valve Assembly (All) RK548Y
- Relieving Diaphragm, Valve Assembly (All) RK549Y

For Fluorocarbon Repair Kits, add X64 to Kit Number suffix.

Specifications

Bowl Capacity ..... 1 Ounce

Gauge Ports (2) ..... 1/8 Inch

Maximum Pressure –
- Zinc Bowl (D) ..... 0 to 300 PSIG
- Polycarbonate Bowl (A) ..... 0 to 150 PSIG

Reduced Pressure Range –
- 0 to 25 PSIG ..... (0 to 1.7 bar) (A)
- 0 to 60 PSIG ..... (0 to 4.1 bar) (B)
- 2 to 125 PSIG ..... (0.15 to 8.5 bar) (C)

Temperature Rating ..... 40°F to 125°F (4.4°C to 52°C)

Port Threads ..... 1/4 Inch

Weight –
- Zinc Bowl (D) ..... 0.6 lb. (0.27 kg) / Unit
  12 lb. (5.44 kg) / 24-Unit Master Pack
- Polycarbonate Bowl (A) ..... 0.3 lb. (0.14 kg) / Unit
  6 lb. (2.72 kg) / 24-Unit Master Pack

Materials of Construction

Adjusting Knob ..... Acetal

Body ..... Aluminum

Bowls –
- Polycarbonate (A) ..... Polycarbonate
- Metal (D) ..... Zinc
  Zinc with Automatic Pulse Drain

Elastomers ..... Buna N

Filter Element ..... Sintered Polypropylene

Filter Retainer, Vane Plate ..... Acetal

Innervalve, Diaphragm, Button, Drain ..... Brass

Parker Hannifin Corporation
Pneumatic Division
Richland, Michigan
www.wattsfluidair.com

B11 Filter / Regulators – Compact

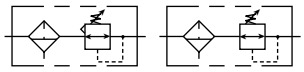

Features

- Space saving package offers both filter and regulator features for optimal performance
- Excellent water removal efficiency
- Rolling diaphragm for extended life
- Quick response, and accurate pressure regulation regardless of changing flow or inlet pressure
- Two high flow 1/4" gauge ports can be used as additional outlets
- Shown with recommended metal bowl guard
- High flow: 1/4" – 46 SCFM§
  3/8" – 55 SCFM§
  1/2" – 61 SCFM§

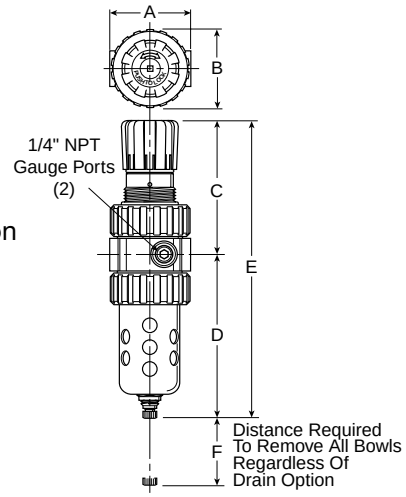

Port Size	NPT	
	Twist Drain	Auto Float Drain
Poly Bowl‡ / Metal Guard		
1/4"	**B11-022A11A***	**B11-026A11A***
3/8"	**B11-032A11A***	**B11-036A11A***
1/2"	**B11-042A11A***	**B11-046A11A***
Metal Bowl / Sight Gauge		
1/4"	**B11-024A11A***	**B11-028A11A***
3/8"	**B11-034A11A***	**B11-038A11A***
1/2"	**B11-044A11A***	**B11-048A11A***

B11 Filter / Regulator Dimensions			
A	**B**	**C**	**D**
2.81 (71)	2.74 (70)	4.69 (119)	5.69 (145)
D†	**E**	**E†**	**F**
5.74 (146)	10.38 (264)	10.43 (265)	2.25 (57)

Inches (mm)
† With Twist Drain or Auto Pulse Drain

Standard part numbers shown bold.
For other models refer to ordering information below.

NOTE: 1.218 Dia. (31mm) hole required for panel mounting.

‡ For polycarbonate bowl see Caution on page inside cover.

§ SCFM = Standard cubic feet per minute at 100 PSIG inlet, 75 PSIG no flow secondary setting and 25% pressure drop.

⚠ WARNING

Product rupture can cause serious injury.
Do not connect regulator to bottled gas.
Do not exceed maximum primary pressure rating.

Ordering Information

B11	—	02	2	A	11	A	*	

Port Threads
- **– NPT**
- G BSPP

* 1/4 & 3 inch meet ISO 1179-1 Standard.

Port Size
- **02 1/4 Inch**
- **03 3/8 Inch**
- **04 1/2 Inch**

Element
- **A 40 Micron**

Relief
- **A Relieving**
- L Non- Relieving

Options
- **Blank No Options**
- L† Preset Non-Adjustable
- P† Preset Adjustable
- R Reverse Flow

† Inlet Pressure is 100 PSIG. For other pressures, contact factory.

Engineering Level
- * Will be Entered at Factory

Pressure Range

Without Gauge
- **11 0-60 PSIG**
- **13 0-125 PSIG**
- 15§ 0-250 PSIG

With Gauge
- **16 0-60 PSIG**
- **18 0-125 PSIG**
- 21§ 0-250 PSIG

§ If 250 psig spring range is used, use metal bowl.

Bowl Options

Polycarbonate Bowl	Metal Bowl
2 Metal Bowl Guard / Twist Drain	3 Twist Drain
6 Metal Bowl Guard / Auto Float Drain	**4 Sight Gauge / Twist Drain**
	7 Auto Float Drain
	8 Sight Gauge / Auto Float Drain

BOLD ITEMS ARE MOST POPULAR.

Parker Hannifin Corporation
Pneumatic Division
Richland, Michigan
www.wattsfluidair.com

Technical Information

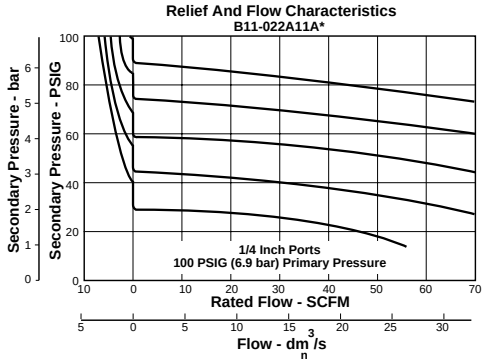

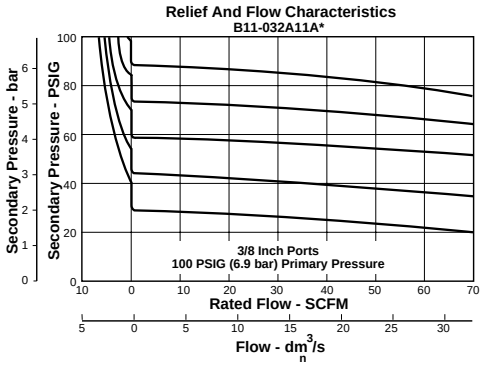

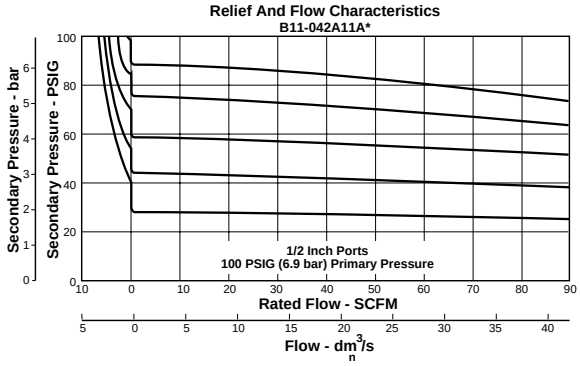

⚠ CAUTION:

REGULATOR PRESSURE ADJUSTMENT – The working range of knob adjustment is designed to permit outlet pressures within their full range. Pressure adjustment beyond this range is also possible because the knob is not a limiting device. This is a common characteristic of most industrial regulators, and limiting devices may be obtained only by special design.
For best performance, regulated pressure should always be set by increasing the pressure up to the desired setting.

B11 Filter / Regulator Kits & Accessories

Bonnet Assembly Kit PS715

Bowl Guard Kit PS705

Bowl Kits –
- Poly Bowl – Automatic Float Drain PS722
  - Twist Drain PS732
- Metal Bowl – Automatic Float Drain PS726
  - Twist Drain PS734
  - Sight Gauge / Automatic Drain PS723
  - Sight Gauge / Twist Drain PS735P

Control Knob P04069B

Drain Kits – Automatic Float Drain PS506
Twist Drain PS512

Filter Element Kits – 40 Micron PS701

Gauges – 2" Dial Face
- 60 psig (0 to 4.1 bar) K4520N14060
- 160 psig (0 to 11.0 bar) K4520N14160
- 300 psig (0 to 20.0 bar) K4520N14300

1-3/4" Digital Round Face
- 160 psig (0 to 11.0 bar) K4517N14160D

Mounting Bracket Kit (Includes Panel Mount Nut) PS707

Panel Mount Nut P04082

Service Kits – Non-Relieving (Includes Poppet) PS711
Relieving (Includes Poppet) PS710

Seat Insert Kit PS713

Springs –
- 1- 30 psig Range P01698
- 1- 60 psig Range P04062
- 2- 125 psig Range P04063
- 5- 250 psig Range P04064

Tamperproof Kit (Key Lock) PS737

Specifications

Bowl Capacity ..... 4.4 Ounces

Gauge Ports (2) ..... 1/4 Inch
(Can be used as Additional Full Flow 1/4" Outlet Ports)

Port Threads ..... 1/4, 3/8, 1/2 Inch

Pressure & Temperature Ratings –

Polycarbonate Bowl – 0 to 150 psig (0 to 10.4 bar)
32°F to 125°F (0°C to 52°C)

Metal Bowl – 0 to 250 psig (0 to 17.2 bar)
32°F to 175°F (0°C to 80°C)

Automatic Float Drain – 15 to 250 psig (1.0 to 17.2 bar)

Secondary Pressure Ranges –
- Standard Pressure ..... 2 to 125 psig (0 to 8.6 bar)
- Low Pressure ..... 1 to 60 psig (0 to 4.1 bar)
- High Pressure ..... 5 to 250 psig (0.4 to 17.2 bar)

Sump Capacity ..... 1.75 Ounces

Weight ..... 1.6 lb. (0.7 kg)

Materials of Construction

Adjusting Stem ..... Steel

Body ..... Zinc

Bonnet, Internal Parts ..... Plastic

Bowls Available – Transparent ..... Polycarbonate
Metal (With or Without Sight Gauge) ..... Zinc

Bowl Guard ..... Steel

Collar ..... Plastic

Diaphragm ..... Nitrile

Drains – Manual Twist Drain Standard
Body & Nut ..... Plastic

Automatic Float Drain Optional
(Interchangeable for Field Conversions)
- Operating Range ..... 10 to 250 psig (.7 to 17.2 bar)
- Housing, Float ..... Plastic
- Seals ..... Nitrile
- Springs, Push Rod ..... Stainless Steel

Knob ..... Plastic

Filter Elements – 40 Micron (Standard) ..... Plastic

Seals ..... Nitrile

Sight Gauge ..... Polyamide (Nylon)

Springs – Poppet ..... Stainless
Control ..... Steel

Parker Hannifin Corporation
Pneumatic Division
Richland, Michigan
www.wattsfluidair.com

B11 Filter / Regulators – Standard

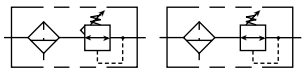

Features

- Space saving package offers both filter and regulator features for optimal performance
- Excellent water removal efficiency
- Rolling diaphragm for extended life
- Quick response, and accurate pressure regulation regardless of changing flow or inlet pressure
- Two high flow 1/4" gauge ports can be used as additional outlets
- Shown with recommended metal bowl guard
- High flow: 3/4" – 90 SCFM§

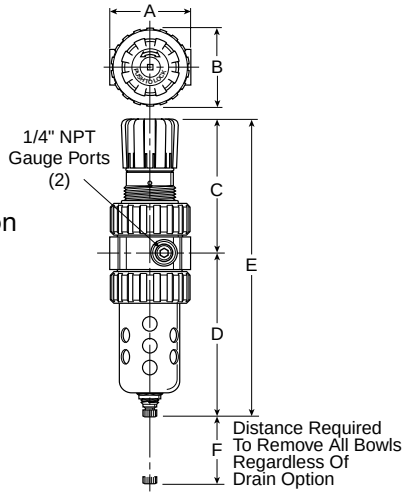

Port Size	NPT	
	Twist Drain	Auto Float Drain
Poly Bowl‡ / Metal Guard		
3/4"	**B11-062A11A***	**B11-066A11A***
Metal Bowl / Sight Gauge		
3/4"	**B11-064A11A***	**B11-068A11A***

Standard part numbers shown bold.
For other models refer to ordering information below.
‡ For polycarbonate bowl see Caution on inside cover.
§ SCFM = Standard cubic feet per minute at 100 psig inlet, 90 psig no flow secondary setting and 10 psig pressure drop.
NOTE: 2.00 Dia. (50.8 mm) hole required for panel mounting.
Max. panel thickness 1/4".

B11 Filter / Regulator Dimensions			
A	**B**	**C**	**D**
3.24 (82)	3.25 (83)	4.79 (122)	6.97 (177)
D†	**E**	**E†**	**F**
7.00 (178)	11.76 (299)	11.79 (299)	2.75 (70)

Inches (mm)
† With Twist Drain or Auto Pulse Drain

⚠ WARNING

Product rupture can cause serious injury.
Do not connect regulator to bottled gas.
Do not exceed maximum primary pressure rating.

Ordering Information

B11	—	06	2	A	11	A	*	

Port Threads
- **– NPT**
- G BSPP

Port Size
- **06 3/4 Inch**

Element
- **A 40 Micron**

Relief
- **A Relieving**
- L Non- Relieving

Options
- **Blank No Options**
- L† Preset Non-Adjustable
- P† Preset Adjustable
- R Reverse Flow

† Inlet Pressure is 100 PSIG. For other pressures, contact factory.

Bowl Options

Polycarbonate Bowl	Metal Bowl
2 Metal Bowl Guard / Twist Drain	3 Twist Drain
6 Metal Bowl Guard / Auto Float Drain	**4 Sight Gauge / Twist Drain**
	7 Auto Float Drain
	8 Sight Gauge / Auto Float Drain

Pressure Range

Without Gauge
- **11 0-60 PSIG**
- **13 0-125 PSIG**
- 15§ 0-250 PSIG

With Gauge
- **16 0-60 PSIG**
- **18 0-125 PSIG**
- 21§ 0-250 PSIG

§ If 250 psig spring range is used, use metal bowl.

Engineering Level
- * Will be Entered at Factory

BOLD ITEMS ARE MOST POPULAR.

Parker Hannifin Corporation
Pneumatic Division
Richland, Michigan
www.wattsfluidair.com

Technical Information

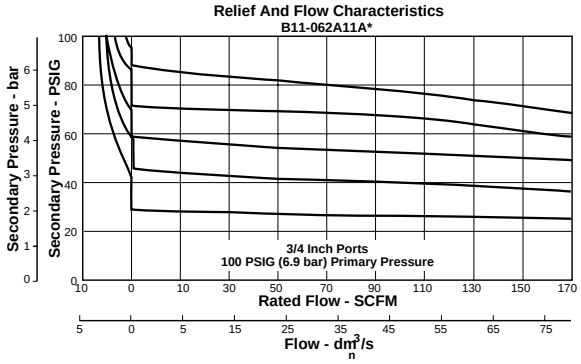

> **⚠ CAUTION:**
> **REGULATOR PRESSURE ADJUSTMENT –** The working range of knob adjustment is designed to permit outlet pressures within their full range. Pressure adjustment beyond this range is also possible because the knob is not a limiting device. This is a common characteristic of most industrial regulators, and limiting devices may be obtained only by special design.
> For best performance, regulated pressure should always be set by increasing the pressure up to the desired setting.

B11 Filter / Regulator Kits & Accessories

Bonnet Assembly Kit PS715

Bowl Guard Kit PS805

Bowl Kits –
Poly Bowl – Automatic Float Drain PS822
Twist Drain PS832
Metal Bowl – Automatic Float Drain PS826
Twist Drain PS834
Sight Gauge / Automatic Drain PS823
Sight Gauge / Twist Drain PS835

Control Knob P04069B

Drain Kits – Automatic Float Drain PS506
Twist Drain PS512

Filter Element Kits – 40 Micron PS801

Gauges – 2" Dial Face
60 psig (0 to 4.1 bar) K4520N14060
160 psig (0 to 11.0 bar) K4520N14160
300 psig (0 to 20.0 bar) K4520N14300

1-3/4" Digital Round Face
160 psig (0 to 11.0 bar) K4517N14160D

Mounting Bracket Kit (Includes Panel Mount Nut) PS807

Panel Mount Nut P04082

Service Kits – Non-Relieving (Includes Poppet) PS811
Relieving (Includes Poppet) PS810

Seat Insert Kit PS813

Springs – 1- 30 psig Range P01698
1- 60 psig Range P04062
2- 125 psig Range P04063
5- 250 psig Range P04064

Tamperproof Kit (Key Lock) PS737

Specifications

Bowl Capacity ..... 7.2 Ounces

Gauge Ports (2) ..... 1/4 Inch
(Can be used as Additional Full Flow 1/4" Outlet Ports)

Port Threads ..... 1/2, 3/4 Inch

Pressure & Temperature Ratings –
Polycarbonate Bowl – 0 to 150 psig (0 to 10.4 bar)
32°F to 125°F (0°C to 52°C)
Metal Bowl – 0 to 250 psig (0 to 17.2 bar)
32°F to 175°F (0°C to 80°C)
Automatic Float Drain – 15 to 250 psig (1.0 to 17.2 bar)

Secondary Pressure Ranges –
Standard Pressure ..... 2 to 125 psig (0 to 8.6 bar)
Low Pressure ..... 1 to 60 psig (0 to 4.1 bar)
High Pressure ..... 5 to 250 psig (0.4 to 17.2 bar)

Sump Capacity ..... 2.8 Ounces

Weight ..... 2.5 lb. (1.1 kg)

Materials of Construction

Adjusting Stem ..... Steel

Body ..... Zinc

Bonnet, Internal Parts ..... Plastic

Bowls Available – Transparent ..... Polycarbonate
Metal (With or Without Sight Gauge) ..... Zinc

Bowl Guard ..... Steel

Collar ..... Plastic or Metal

Diaphragm ..... Nitrile

Drains – Manual Twist Drain Standard
Body & Nut ..... Plastic

Automatic Float Drain Optional
(Interchangeable for Field Conversions)
Operating Range ..... 10 to 250 psig (.7 to 17.2 bar)
Housing, Float ..... Plastic
Seals ..... Nitrile
Springs, Push Rod ..... Stainless Steel

Knob ..... Plastic

Filter Elements – 40 Micron (Standard) ..... Plastic

Seals ..... Nitrile

Sight Gauge ..... Polyamide (Nylon)

Springs – Poppet ..... Stainless
Control ..... Steel

Parker Hannifin Corporation
Pneumatic Division
Richland, Michigan
www.wattsfluidair.com

Lubricators

Lubrication

Many pneumatic system components and most pneumatic tools require oil lubrication for proper operation and long service life. This lubricant is typically carried by the air stream. Too little oil can cause excessive wear and premature failure. Too much oil is wasteful and can become a contaminant, particularly when carried over with the air exhaust. Intermittent lubrication may be the worst situation because the oil film can dry out to form sludges and varnishes on internal surfaces.

Air line lubricators meter oil from a reservoir into the moving air stream. In general terminology, the oil droplets are usually termed a fog. For best results, the lubricator should be located as close as possible to the point where lubrication is required.

How to Select the Proper Lubricator

Use of proper lubricator can greatly extend the life of expensive downstream pneumatic equipment. Lubricators often are selected according to pipe size. Other selection factors are type of bowl material, bowl size, and refilling system capability. Bowls are available in both polycarbonate and metal. Polycarbonate offers the advantage or transparency, for simplified inspection of oil level and condition. However, caution must be exercised when using polycarbonate bowls in any area where certain chemicals are used. (Please read the warning carefully.)

In addition to choice of bowls, minimum and maximum flow rates and pressure requirements should also be considered. Be sure to check the pressure drop curves, to make certain the selected model will not create a higher pressure drop than the system design can tolerate.

Lubricator Construction

Bowls are available in polycarbonate and metal, subject to the same constraints discussed in the Filter Section. Transparent polycarbonate simplifies inspection of the oil level and checking for dirt and liquid condensate in the oil. Note that the system must be exhausted before removing the bowl.

In some models, the system must also be exhausted before opening the fill plug to recharge the lubricator. Other designs automatically bypass the air during refilling.

⚠ Warning

The plastic material used to manufacture the plastic bowls, and the sight gauge on metal bowls, may be attacked by certain chemicals. Do not use this lubricator on systems with air supplied by a compressor lubricated with synthetic oils or oils containing phosphate esters or chlorinated hydrocarbons. These oils can carry over into the air lines and chemically attack and possibly rupture the bowl or sight gauge. Also, do not expose the bowl or sight gauge to materials such as carbon tetrachloride, trichlorethylene, acetone, paint thinner, cleaning fluids, or other harmful materials, for they too will cause the plastic to craze and/or rupture. For use in environments where these, or any, chemicals may be present, consult the factory for approval.

Lubricator Installation

The lubricators listed in this catalog should be placed before any valving and stay pressurized before, during, and after machine tool cycles. These lubricators should be placed no farther away than 15 feet from the desired point of lubrication.

Parker Hannifin Corporation
Pneumatic Division
Richland, Michigan
www.wattsfluidair.com

Lubricators

Lubrication Operation

Most lubricator designs include a high-velocity venturi section in the air flow path which creates a low-pressure area to draw oil from the reservoir through a capillary tube to the point of injection. There, the air stream breaks up the oil into droplets.

In a typical lubricator, filtered and regulated air enters the lubricator housing and is channeled in either of two directions depending on flow rate. At low flow rates, all the air passes through the venturi where it mixes with metered oil droplets. Under higher flow conditions, the spring-loaded bypass valve opens and the excess flow bypasses the venturi, then blends with the lubricated air at a downstream point. A manual adjustment (needle valve) in the housing sets the oil drip-rate into the air stream; a sight gauge allows that rate to be monitored. Fill plugs at the lubricator top provide access to refill the reservoir with oil. The bowl is removable for cleaning.

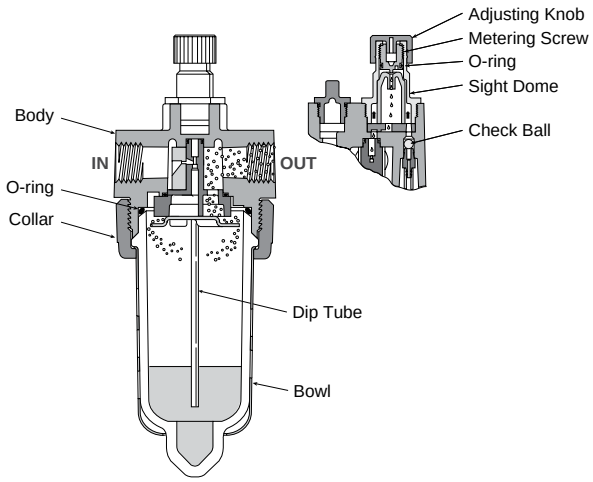

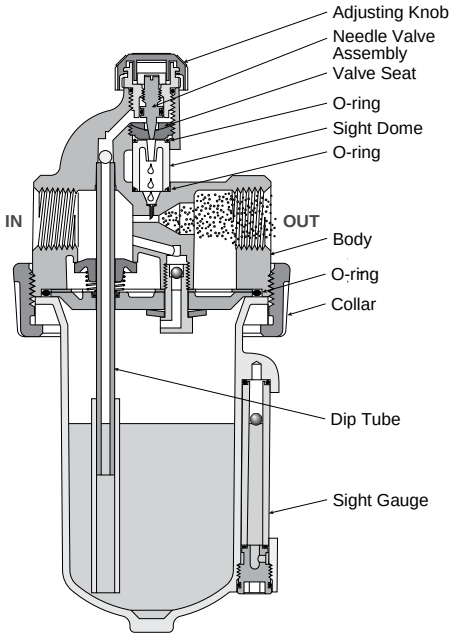

Parker Hannifin Corporation
Pneumatic Division
Richland, Michigan
www.wattsfluidair.com

04L Mist Lubricators – Miniature

Features

- Proportional oil delivery over a wide range of air flows
- Precision needle valve assures repeatable oil delivery and provides simple adjustment of delivery rate
- Ideal for low and high flow applications with changing air flow
- Transparent sight dome for 360° visibility
- High flow: 1/8" – 20 SCFM§
  1/4" – 20 SCFM§

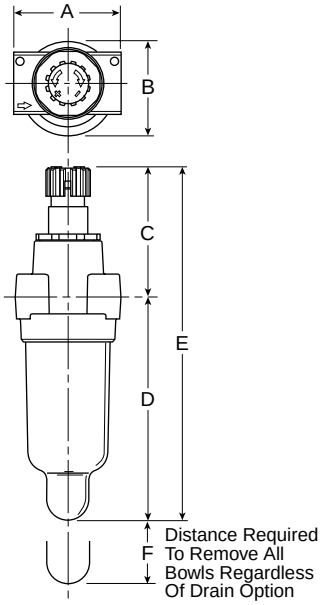

Port Size	NPT	
	Twist Drain	No Drain
Poly Bowl ‡		
1/8"	—	**04L00G***
1/4"	—	**04L10G***
Metal Bowl without Sight Gauge		
1/8"	**04L03G***	—
1/4"	**04L13G***	—

Standard part numbers shown bold.
For other models refer to ordering information below.

‡ For polycarbonate bowl see Caution on inside cover.

§ SCFM = Standard cubic feet per minute at 90 PSIG inlet and 5 PSIG pressure drop.

04L Lubricator Dimensions		
A 1.73 (44)	**B** 1.56 (40)	**C** 2.16 (55)
D 3.64 (92)	**D†** 3.78 (96)	**E** 5.80 (147)
E† 5.94 (151)	**F** 1.60 (41)	

Inches (mm)

† With Twist Drain.

Ordering Information

04L	1	0	G	*	

Port Size
- **0 1/8 Inch**
- **1 1/4 Inch**

Bowl Options

Polycarbonate Bowl	Metal Bowl
0 Without Drain	**3 Twist Drain**
1 Twist Drain	

Body
- **G Without Tamperproof Cap. No Fill Plug**

Engineering Change Designator
- Will be Entered at Factory

Port Type
- **Blank NPT**
- 1 BSPP
- 2 BSPT

BOLD ITEMS ARE MOST POPULAR.

Parker Hannifin Corporation
Pneumatic Division
Richland, Michigan
www.wattsfluidair.com

Technical Information

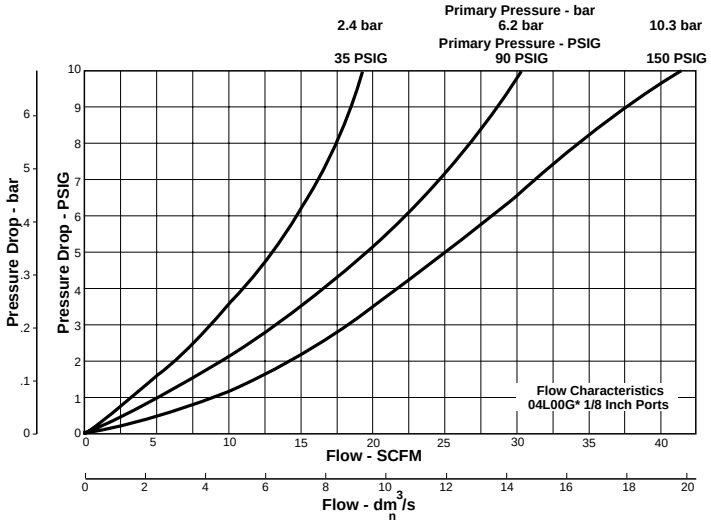

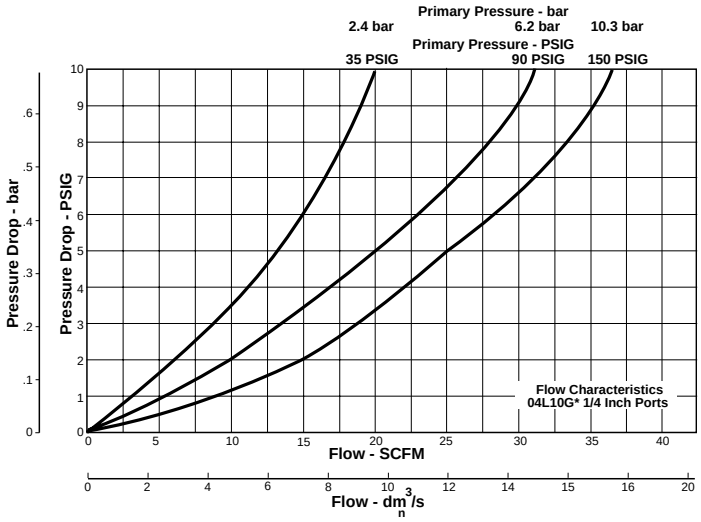

04L Mist Lubricator Kits & Accessories

Bowl Kits –

Poly Bowl –
No Drain PS421
Twist Drain PS420

Metal Bowl –
Twist Drain (No Sight Gauge) PS447B

Mounting Bracket Kit PS419

Oil – 1 Gal. F442002
12 Quart Case F442003
4 Gallon Case F442005

Specifications

Bowl Capacity ..... 1 Ounce

Minimum Flow for Lubrication ..... 0.5 SCFM at 100 PSIG

Port Threads ..... 1/8, 1/4 Inch

Pressure & Temperature Ratings –
Polycarbonate Bowl ..... 0 to 150 PSIG (0 to 10.3 bar)
32°F to 125°F (0°C to 52°C)
Metal Bowl ..... 0 to 250 PSIG (0 to 17.2 bar)
32°F to 175°F (0°C to 80°C)

Suggested Lubricant – ..... F442 Oil

Petroleum based oil of 100 to 200 SUS viscosity at 100°F and an aniline point greater than 200°F

(DO NOT USE OILS WITH ADDITIVES, COMPOUNDED OILS CONTAINING SOLVENTS, GRAPHITE, DETERGENTS, OR SYNTHETIC OILS.)

Weight ..... 0.4 lb. (0.18 kg)

Materials of Construction

Body ..... Zinc

Bowls – Transparent ..... Polycarbonate
Metal (Without Sight Gauge) ..... Zinc

Drains – Twist – Body & Nut ..... Plastic

Seals ..... Nitrile

Sight Dome ..... Polycarbonate

Parker Hannifin Corporation
Pneumatic Division
Richland, Michigan
www.wattsfluidair.com

L508 Mist Lubricators – Miniature

Features

- Proportional oil delivery over a wide range of air flows
- Precision needle valve assures repeatable oil delivery and provides simple adjustment of delivery rate
- Ideal for low and high flow applications with changing air flow
- Polycarbonate sight dome for 360° visibility
- High flow: 1/8" – 20 SCFM§
  1/4" – 20 SCFM§

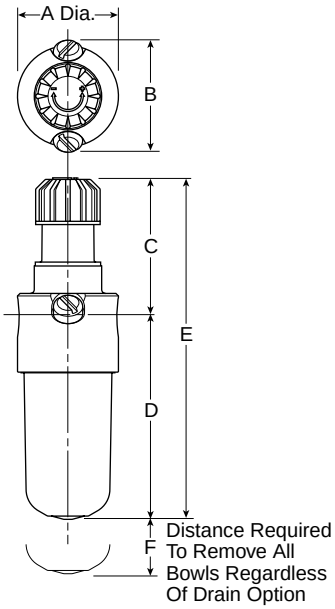

Port Size	NPT	
	No Drain	Twist Drain
Poly Bowl ‡		
1/8"	**L508-01A**	**L508-01AX9**
1/4"	**L508-02A**	**L508-02AX9**
Metal Bowl without Sight Gauge		
1/8"	**L508-01D**	**L508-01DX9**
1/4"	**L508-02D**	**L508-02DX9**

Standard part numbers shown bold.
For other models refer to ordering information below.

‡ For polycarbonate bowl see Caution on inside cover.

§ SCFM = Standard cubic feet per minute at 90 PSIG inlet and 5 PSIG pressure drop.

L508 Lubricator Dimensions		
A 1.55 (39.2)	**B** 1.74 (44)	**C** 2.21 (56)
D 3.10 (70.7)	**D†** 3.68 (93.5)	**E** 5.21 (132)
E† 5.79 (147)	**F** 1.70 (43)	

Inches (mm)
† With Twist Drain.

Ordering Information

L508	—	01	A		/**

Port Threads
- **– NPT**
- G BSPP

Port Size
- **01 1/8 Inch**
- **02 1/4 Inch**

Bowl
- **A Polycarbonate**
- D Metal without Sight Gauge

Options
- **Blank NPT**
- X9 Manual Twist Drain
- X67 Mounting Bracket
- X33* Polyurethane Bowl

* Add .65" to overall length.

Engineering Change Designator
Will be Entered at Factory

BOLD ITEMS ARE MOST POPULAR.

Parker Hannifin Corporation
Pneumatic Division
Richland, Michigan
www.wattsfluidair.com

Technical Information

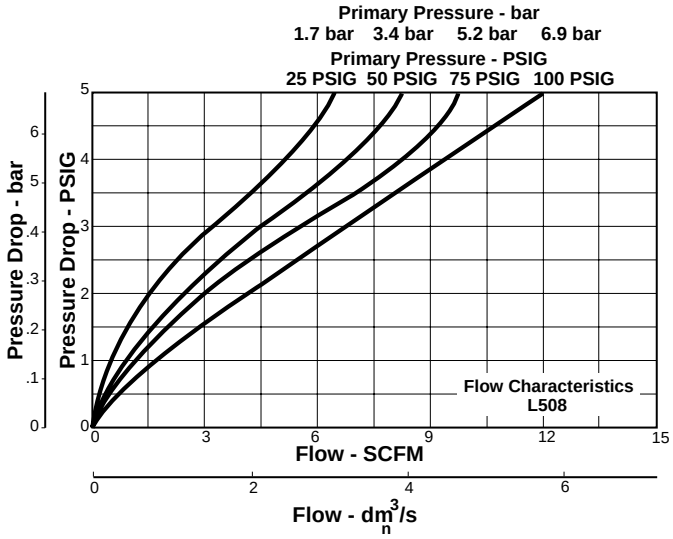

L508 Mist Lubricator Kits & Accessories

Bowl Kits –

Polycarbonate Bowl –
- No Drain BK508Y
- Manual Twist Drain BK504Y

Metal Bowl –
- No Drain BK509Y
- Manual Twist Drain (No Sight Gauge)..... BK505Y

Mounting Bracket Kit ..... Must Be Ordered with Lubricator

Oil –
- 1 Gal. F442002
- 12 Quart Case F442003
- 4 Gallon Case F442005

Specifications

Bowl Capacity ..... 1 Ounce

Minimum Flow for Lubrication ..... 0.5 SCFM at 100 PSIG

Port Threads ..... 1/8, 1/4 Inch

Pressure & Temperature Ratings –

Polycarbonate Bowl – ..... 0 to 150 PSIG (0 to 10.3 bar)
32°F to 125°F (0°C to 52°C)

Metal Bowl –..... 0 to 300 PSIG (0 to 20.4 bar)
40°F to 150°F (4°C to 65.6°C)

Suggested Lubricant – ..... F442 Oil

Petroleum based oil of 100 to 200 SUS viscosity at 100°F and an aniline point greater than 200°F

(DO NOT USE OILS WITH ADDITIVES, COMPOUNDED OILS CONTAINING SOLVENTS, GRAPHITE, DETERGENTS, OR SYNTHETIC OILS.)

Weight ..... 0.4 lb. (0.18 kg)

Materials of Construction

Body ..... Aluminum

Bowls –
- Polycarbonate ..... Polycarbonate
- Metal (Without Sight Gauge) ..... Zinc

Drains –
- Manual Twist..... Brass

Seals ..... Nitrile

Sight Dome ..... Polyurethane

Parker Hannifin Corporation
Pneumatic Division
Richland, Michigan
www.wattsfluidair.com

L606 Micro-Mist Lubricators – Compact

Features

- Proportional oil delivery over a wide range of air flows
- Generates oil particles of 5 micron or smaller downstream to lubricate systems having complex piping arrangements
- Precision needle valve assures repeatable oil delivery and provides simple adjustment of delivery rate
- Ideal for low and high flow applications with changing air flow
- Transparent sight dome for 360° visibility.
- Yellow fill cap identifies Micro-Mist Lubricator
- High Flow: 1/4" – 40 SCFM §
  3/8" – 60 SCFM §
  1/2" – 90 SCFM §

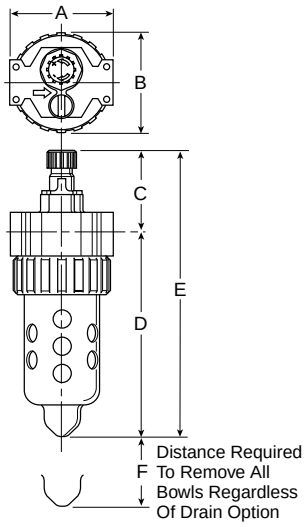

Port Size	NPT	
	Twist Drain	No Drain
Poly Bowl ‡ / Metal Guard		
1/4"	—	**L606-022B***
3/8"	—	**L606-032B***
1/2"	—	**L606-042B***
Metal Bowl / Sight Gauge		
1/4"	**L606-024B***	—
3/8"	**L606-034B***	—
1/2"	**L606-044B***	—

Standard part numbers shown bold.
For other models refer to ordering information below.

‡ For polycarbonate bowl and sight dome, see Caution on inside cover.

§ SCFM = Standard cubic feet per minute at 90 PSIG inlet and 5 PSIG pressure drop.

L606 Lubricator Dimensions			
A	**B**	**C**	**D**
2.81 (71)	2.74 (70)	2.24 (57)	5.58 (142)
D†	**E**	**E†**	**F**
5.69 (145)	7.82 (199)	7.93 (201)	2.25 (57)

Inches (mm)

† With Twist Drain.

Ordering Information

L606	—	02	2	B	*

Port Threads
- **– NPT**
- G* BSPP

* 1/4 & 3/8 inch meet ISO 1179-1 Standard.

Port Size
- **02 1/4 Inch**
- **03 3/8 Inch**
- **04 1/2 Inch**

Bowl Options

Polycarbonate Bowl	Metal Bowl
2 Metal Bowl Guard / No Drain	**4 Sight Gauge / Twist Drain**
6 Metal Bowl Guard / Pressure Fill	8 Sight Gauge / Pressure Fill

Options
- **B With Fill Plug**
- C With Fill Plug/Nylon Sight Dome
- F With Body Pressure Fill
- G With Body Pressure Fill / Nylon Sight Dome

Engineering Level
- * Will be Entered at Factory.

BOLD ITEMS ARE MOST POPULAR.

Parker Hannifin Corporation
Pneumatic Division
Richland, Michigan
www.wattsfluidair.com

Technical Information

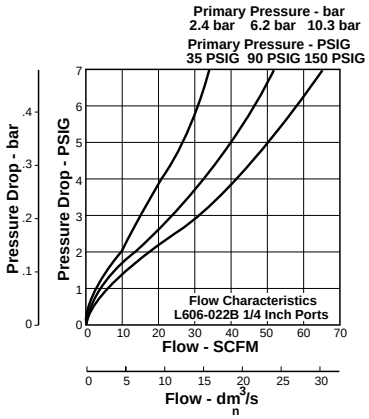

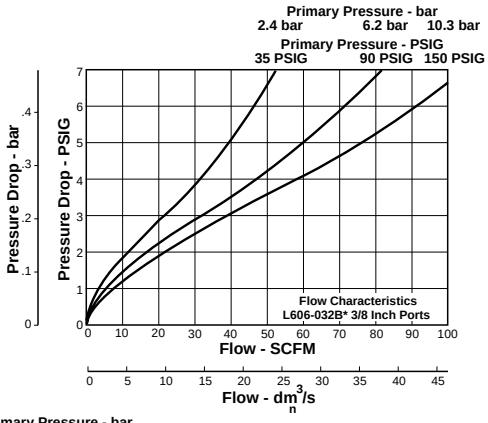

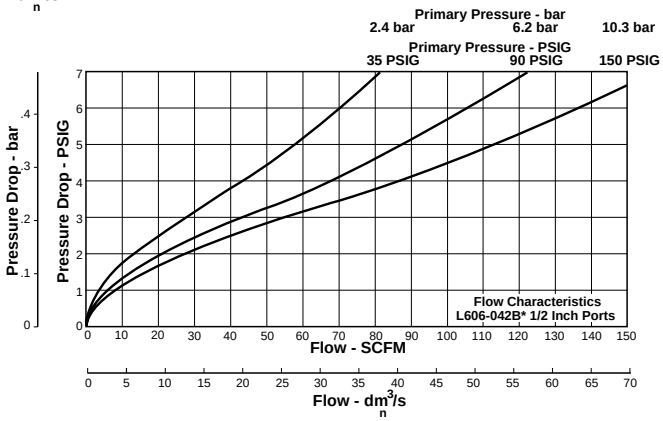

L606 Micro-Mist Lubricator Kits & Accessories

Adjustment Knob P04121
Adjustment Knob *(Old L606)* *606Y72*
Bowl Guard Kit PS705
Bowl Kits –
Poly Bowl – No Drain PS746
Twist Drain PS717
Pressure Fill PS719
Plastic Bowl Guard (Old L606) *BK606Y*
Metal Bowl – Sight Gauge / Twist Drain PS729
Sight Gauge / Pressure Fill PS720
Zinc with Sight Gauge (Old L606) *BK605WY*
Drain Kit – Twist Drain PS512
Fill Cap Kit PS742
Lubricator Service Kit PS748
Mounting Bracket Kit PS743
Mounting Bracket Kit *(Old L606)* *SAF602-0571*
Oil – 1 Gal. F442002
12 Quart Case F442003
4 Gallon Case F442005
Pressure Fill Adapter Kit PS716
Pressure Fill Button P11912
Button Head Fill Fitting (M14 Male Thread) *(Old L606)* *L606C14*
Drip Tube Kit *(Old L606)* *DTK606*
Drip Spout Kit *(Old L606)* *RK606SY*
Sight Dome / Fill Cap Kit PS739
Nylon Sight Dome Kit PS740N
Repair Kits –
Needle Valve Assembly (B, W) (Old L606) *RK606Y*
Sight Gauge for "W" Bowl (Old L606) *RKB605WY*

Specifications

Bowl Capacity ..... 2.60 Ounces
Minimum Flow for Lubrication ..... 1 SCFM at 100 psig
Port Threads ..... 1/4, 3/8, 1/2 Inch
Pressure & Temperature Rating –
Polycarbonate Bowl – 0 to 150 psig (0 to 10.3 bar)
32°F to 125°F (0°C to 52°C)
Metal Bowl – 0 to 250 psig (0 to 17.2 bar)
32°F to 175°F (0°C to 80°C)
Suggested Lubricant ..... F442 Oil
Petroleum based oil of 100 to 200 SSU viscosity at 100°F (38°C) and an aniline point greater than 200°F (93°C)
(DO NOT USE OILS WITH ADDITIVES, COMPOUNDED OILS CONTAINING SOLVENTS, GRAPHITE, DETERGENTS, OR SYNTHETIC OILS.)
Weight ..... 1.2 lb. (.5 kg)

Materials of Construction

Body ..... Zinc
Bowls – Transparent ..... Polycarbonate
Metal (With Sight Gauge) ..... Zinc
Bowl Guard ..... Steel
Collar ..... Plastic
Drain – Twist – Body & Nut ..... Plastic
Injector Meter Block & Base Assembly ..... Plastic
Seals ..... Nitrile
Sight Dome ..... Polyamide (Nylon)
Sight Gauge ..... Polyamide (Nylon)

Parker Hannifin Corporation
Pneumatic Division
Richland, Michigan
www.wattsfluidair.com

L606 Micro-Mist Lubricators – Standard

Features

- Proportional oil delivery over a wide range of air flows
- Generates oil particles of 5 micron or smaller downstream to lubricate systems having complex piping arrangements
- Precision needle valve assures repeatable oil delivery and provides simple adjustment of delivery rate
- Ideal for low and high flow applications with changing air flow
- Transparent sight dome for 360° visibility
- Yellow fill cap identifies micro-mist lubricator
- High flow: 3/4" – 90 SCFM§

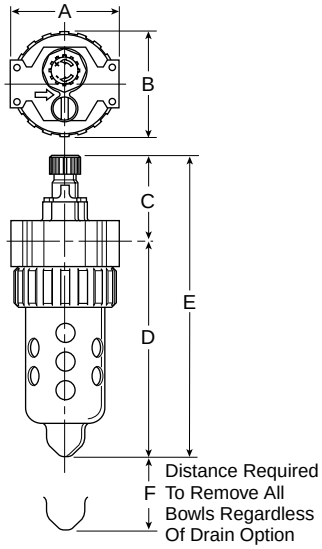

Port Size	NPT	
	Twist Drain	No Drain
Poly Bowl‡ / Metal Guard		
3/4"	—	**L606-062B***
Metal Bowl / Sight Gauge		
3/4"	**L606-064B***	—

Standard part numbers shown bold.
For other models refer to ordering information below.
‡ For polycarbonate bowl and sight dome, see Caution on inside cover.
§ SCFM = Standard cubic feet per minute at 90 psig inlet and 5 psig pressure drop.

L606 Lubricator Dimensions			
A	**B**	**C**	**D**
3.24 (82)	3.25 (83)	2.41 (61)	6.86 (174)
D†	**E**	**E†**	**F**
6.95 (177)	9.09 (231)	9.35 (237)	2.75 (70)

Inches (mm)
† With Twist Drain.

Ordering Information

L606	—	06	2	B	*

Port Threads
- **– NPT**
- G BSPP

Port Size
- **06 3/4 Inch**

Bowl Options

Polycarbonate Bowl	Metal Bowl
2 Metal Bowl Guard / No Drain	**4 Sight Gauge / Twist Drain**
6 Metal Bowl Guard / Pressure Fill	8 Sight Gauge / Pressure Fill

Options
- **B With Fill Plug**
- C With Fill Plug/Nylon Sight Dome
- F With Body Pressure Fill
- G With Body Pressure Fill / Nylon Sight Dome

Engineering Level
- * Will be Entered at Factory.

BOLD ITEMS ARE MOST POPULAR.

Parker Hannifin Corporation
Pneumatic Division
Richland, Michigan
www.wattsfluidair.com

Technical Information

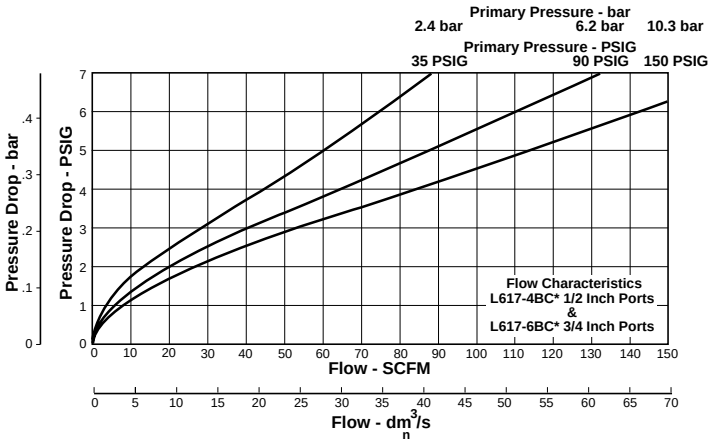

L606 Micro-Mist Lubricator Kits & Accessories

Adjustment Knob P04121

Adjustment Knob *(Old L606)* *606Y72*

Bowl Guard Kit PS805P

Bowl Kits –

Poly Bowl – No Drain PS846
Twist Drain PS817
Pressure Fill PS819
Remote Fill PS828
Plastic Bowl Guard (Old L606) *BK606A*

Metal Bowl – Sight Gauge / Twist Drain PS829
Sight Gauge / Pressure Fill PS820
Zinc with Sight Gauge (Old L606) *BK605WA*
Aluminum (E) (Old L606) *BK603A*
Aluminum with Sight Gauge (G) (Old L606) *BK606X30A*

Drain Kit – Twist Drain PS512

Fill Cap Kit PS742

Lubricator Service Kit PS748

Mounting Bracket Kit PS843

Mounting Bracket Kit *(Old L606)* *SAF602-0572*

Oil – 1 Gal. F442002
12 Quart Case F442003
4 Gallon Case F442005

Pressure Fill Adapter Kit PS716

Pressure Fill Button P11912

Button Head Fill Fitting *(M14 Male Thread) (Old L606)* *L606C14*

Drip Tube Kit *(Old L606)* *DTK606*

Drip Spout Kit *(Old L606)* *RK606SY*

Remote Auto-Fill Device PS505C

Sight Dome / Fill Cap Kit PS739

Sight Dome Kit PS740

Nylon Sight Dome Kit PS740N

Repair Kits –
Adjusting Knob (Old L606) *606Y72*
Needle Valve Assembly (B, W) (Old L606) *RK606Y*
Sight Gauge for "W" Bowl (Old L606) *RKB605WY*
Sight Gauge for "G" Bowl (Old L606) *RKB606X30A*

Specifications

Bowl Capacity ..... 4.9 Ounces

Minimum Flow for Lubrication ..... 1 SCFM at 100 PSIG

Port Threads ..... 1/2, 3/4 Inch

Pressure & Temperature Rating –
Polycarbonate Bowl – 0 to 150 psig (0 to 10.3 bar)
32°F to 125°F (0°C to 52°C)

Metal Bowl – 0 to 250 psig (0 to 17.2 bar)
32°F to 175°F (0°C to 80°C)

Suggested Lubricant ..... F442 Oil

Petroleum based oil of 100 to 200 SSU viscosity at 100°F (38°C) and an aniline point greater than 200°F (93°C)

(DO NOT USE OILS WITH ADDITIVES, COMPOUNDED OILS CONTAINING SOLVENTS, GRAPHITE, DETERGENTS, OR SYNTHETIC OILS.)

Weight ..... 1.9 lb. (.9 kg)

Materials of Construction

Body ..... Zinc

Bowls – Transparent ..... Polycarbonate
Metal (With Sight Gauge) ..... Zinc

Bowl Guard ..... Steel

Collar ..... Plastic or Metal

Drain – Twist – Body & Nut ..... Plastic

Injector Meter Block & Base Assembly ..... Plastic

Seals ..... Nitrile

Sight Dome ..... Polycarbonate

Sight Gauge ..... Polyamide (Nylon)

Parker Hannifin Corporation
Pneumatic Division
Richland, Michigan
www.wattsfluidair.com

L606 Mist Lubricators – Standard

Features

- Metal bowl with sight gauge - standard
- Polycarbonate sight dome
- Bowl can be filled while air line is under pressure
- Proportional oil delivery over a wide range of air flows
- Large capacity bowl
- Optional high capacity bowl(s) available
- Precision needle valve assures repeatable oil delivery and provides simple adjustment of delivery rate
- Automatic fill optional (requires external pressurized oil supply)
- High flow: 3/4" – 325 SCFM§
  1" – 350 SCFM§

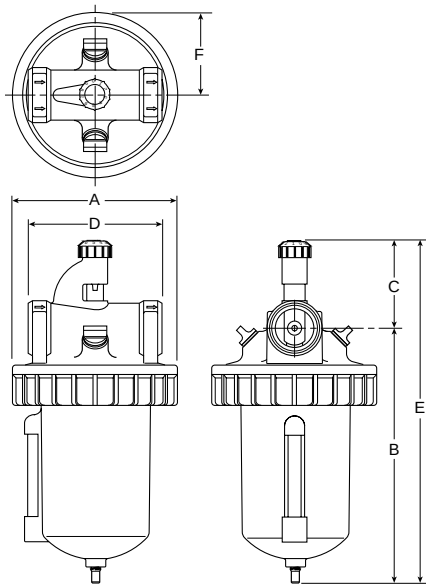

Port Size	NPT No Drain
Metal Bowl / Sight Gauge	
3/4"	**L606-06W**
1"	**L606-08W**
Metal Bowl 32 oz. without Sight Gauge	
3/4"	**L606-06E**
1"	**L606-08E**
Metal Bowl 64 oz. with Sight Gauge	
3/4"	**L606-06G**
1"	**L606-08G**

Standard part numbers shown bold.
For other models refer to ordering information below.

§ SCFM = Standard cubic feet per minute at 90 PSIG inlet and 5 PSIG pressure drop.

L606 Lubricator Dimensions					
A	**B**	**C**	**D**	**E**	**F**
L606-06W, L606-08W					
4.97 (126)	7.25 (184)	2.63 (67)	4.06 (103)	9.88 (251)	2.48 (63)
L606-06E, L606-08E					
4.97 (126)	10.75 (273)	2.63 (67)	4.06 (103)	13.38 (340)	2.48 (63)
L606-06G, L606-08G					
5.00 (127)	9.40 (239)	2.62 (66)	4.06 (103)	12.02 (305)	2.50 (64)

inches (mm)

Ordering Information

L606	—	06	W		/**

Port Threads
- **– NPT**
- G BSPP

Port Size
- **06 3/4 Inch**
- **08 1 Inch**

Bowl
- **E 32 oz. Large Capacity without Sight Gauge**
- G 64 oz. Large Capacity with Sight Gauge
- **W 16 oz. Metal with Sight Gauge**

Options
- **Blank None**
- H Button Head Fill Fitting

Engineering Level
- * Will be Entered at Factory.

BOLD ITEMS ARE MOST POPULAR.

Parker Hannifin Corporation
Pneumatic Division
Richland, Michigan
www.wattsfluidair.com

Technical Information

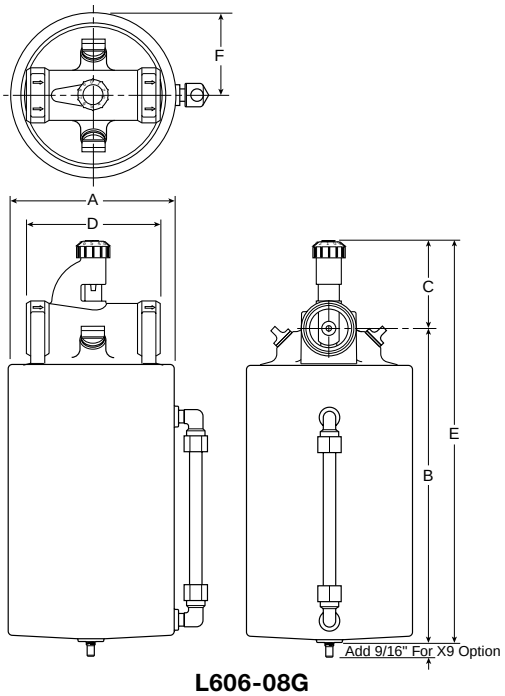

L606-08G

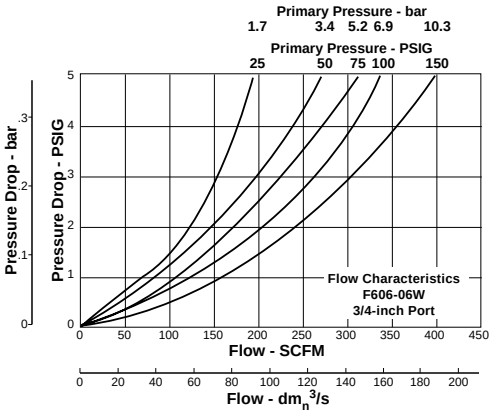

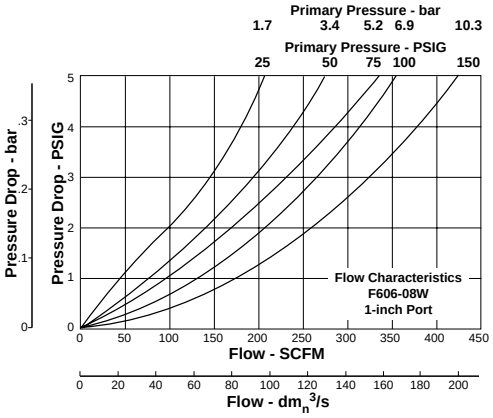

L606 Lubricator Kits & Accessories

Adjusting Knob 606Y72

Bowl Kits –
Aluminum (E) BK603B
Aluminum with Sight Gauge (G) BK606X30B
Zinc with Sight Gauge (W) BK609WB

Button Head Fill Fitting (M14 male thread) L606C14

Dip Tube Kit DTK606

Drip Spout Kit RK606SY

Mounting Bracket –
3/4 Inch units (2 required per unit) SA200AW57
1 Inch units (2 required per unit) SA200CW57

Oil – 1 Gal. F442002
12 Quart Case F442003
4 Gallon Case F442005

Repair Kits – Needle Valve Assembly (All) RK606Y
Sight Gauge Repair Kit (W) RKB605WB
Sight Gauge Repair Kit (G) RKB606X30B
FIll Plug Replacement SAP04113

Specifications

Bowl Capacity –
Aluminum (E) ..... 32 Ounces
Aluminum with Polycarbonate Sight Gauge (G) ..... 64 Ounces
Zinc with Nylon Sight Gauge (W) ..... 16 Ounces

Port Threads ..... 3/4, 1 Inch

Pressure & Temperature Ratings –
Aluminum Bowl (E) ..... 0 to 300 PSIG (0 to 20.4 bar)
40°F to 150°F (4.4°C to 65.6°C)
Aluminum Bowl with
Polycarbonate Sight Gauge (G) ..... 0 to 150 PSIG (0 to 10.2 bar)
40°F to 125°F (4.4°C to 52°C)
Zinc Bowl with
Nylon Sight Gauge (W) ..... 0 to 250 PSIG (0 to 17.2 bar)
40°F to 150°F (4.4°C to 65.6°C)

Suggested Lubricant ..... F442 Oil
Petroleum based oil of 100 to 200 SSU viscosity at 100°F and an aniline point greater than 200°F.

(DO NOT USE OILS WITH ADDITIVES, COMPOUNDED OILS CONTAINING SOLVENTS, GRAPHITE, DETERGENTS, OR SYNTHETIC OILS.)

Weight –
Aluminum Bowl (E) ..... 5.5 lb. (2.49 kg) / Unit
22.3 lb. (10.12 kg) / 4-Unit Master Pack
Aluminum Bowl with
Polycarbonate Sight Gauge (G) ..... 7.2 lb. (3.27 kg) / Unit
28.8 lb. (13.06 kg) / 4-Unit Master Pack
Zinc Bowl with
Nylon Sight Gauge (W) ..... 4.2 lb. (1.91 kg) / Unit
16.6 lb. (7.53 kg) / 4-Unit Master Pack

Materials of Construction

Body ..... Zinc

Bowls – (E) ..... Aluminum
(G) ..... Aluminum with Polycarbonate Sight Gauge
(W) ..... Zinc with Nylon Sight Gauge

Seals ..... Buna N

Parker Hannifin Corporation
Pneumatic Division
Richland, Michigan
www.wattsfluidair.com

L606 Mist Lubricators – Standard

Features

- Metal bowl with sight gauge - standard
- Polycarbonate sight dome
- Bowl can be filled while air line is under pressure
- Proportional oil delivery over a wide range of air flows
- Large capacity bowl
- Optional high capacity bowl(s) available
- Precision needle valve assures repeatable oil delivery and provides simple adjustment of delivery rate
- Automatic fill optional (requires external pressurized oil supply)
- High flow: 1-1/4" – 325 SCFM§
  1-1/2" – 400 SCFM§

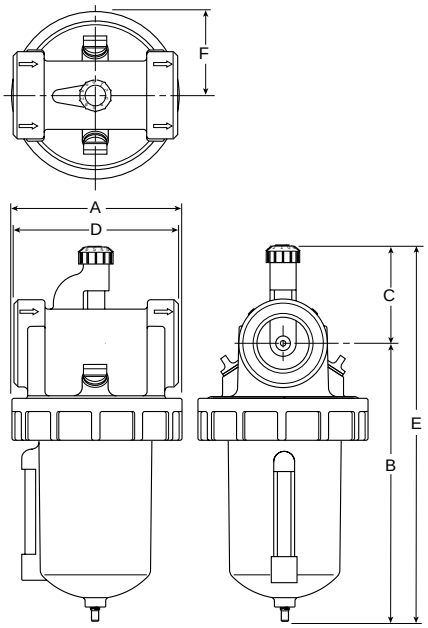

L606-10W12W & L606-10E12E

Port Size	NPT No Drain
Metal Bowl / Sight Gauge	
1-1/4"	**L606-10W**
1-1/2"	**L606-12W**
Metal Bowl 32 oz. without Sight Gauge	
1-1/4"	**L606-10E**
1-1/2"	**L606-12E**
Metal Bowl 64 oz. with Sight Gauge	
1-1/4"	**L606-10G**
1-1/2"	**L606-12G**

§ SCFM = Standard cubic feet per minute at 90 PSIG inlet and 5 PSIG pressure drop.

L606 Lubricator Dimensions					
A	**B**	**C**	**D**	**E**	**F**
L606-10W, L606-12W					
4.97 (126)	7.63 (194)	2.84 (72)	4.81 (122)	10.47 (266)	2.48 (63)
L606-10E, L606-12E					
4.97 (126)	11.13 (283)	2.84 (72)	4.81 (122)	13.97 (355)	2.48 (63)
L606-10G, L606-12G					
5.00 (127)	7.99 (203)	2.84 (72)	4.81 (122)	12.80 (325)	2.50 (64)

inches (mm)

Ordering Information

L606	—	10	W		/**

Port Threads
- **– NPT**
- G BSPP

Port Size
- **10 1-1/4 Inch**
- **12 1-1/2 Inch**

Bowl
- **E 32 oz. Large Capacity without Sight Gauge**
- G 64 oz. Large Capacity with Sight Gauge
- **W 16 oz. Metal with Sight Gauge**

Options
- **Blank None**
- H Button Head Fill Fitting

Engineering Level
- * Will be Entered at Factory

BOLD ITEMS ARE MOST POPULAR.

Parker Hannifin Corporation
Pneumatic Division
Richland, Michigan
www.wattsfluidair.com

Technical Information

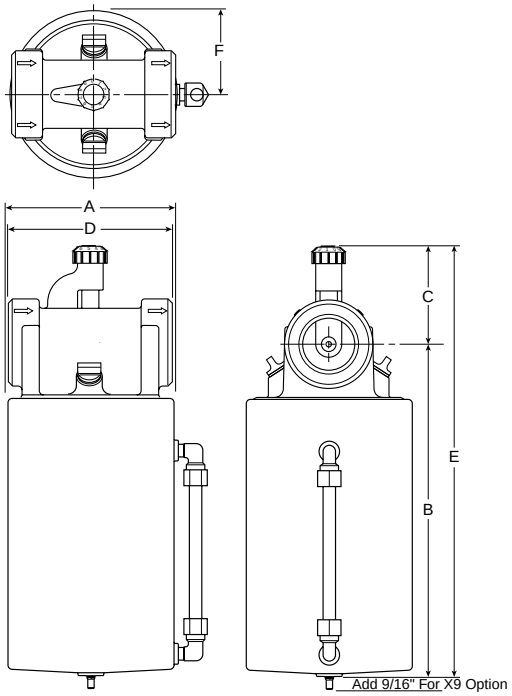

L606-12G

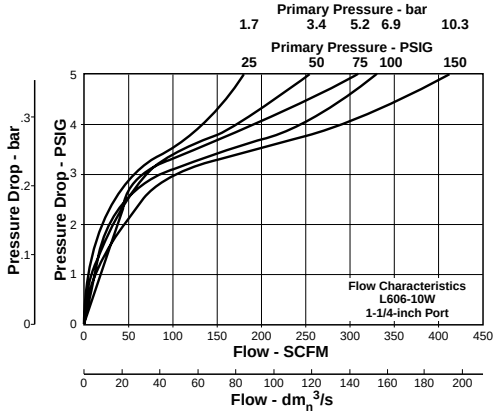

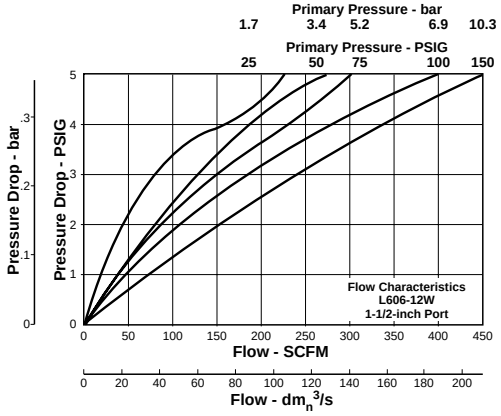

L606 Lubricator Kits & Accessories

Adjusting Knob 606Y72

Bowl Kits –
Aluminum (E) BK603B
Aluminum with Sight Gauge (G) BK606X30B
Zinc with Sight Gauge (W) BK609WB

Button Head Fill Fitting (M14 male thread) L606C14

Dip Tube Kit DTK606

Drip Spout Kit RK606SY

Oil – 1 Gal. F442002
12 Quart Case F442003
4 Gallon Case F442005

Repair Kits – Needle Valve Assembly (All) RK606Y
Sight Gauge Repair Kit (W) RKB605WB
Sight Gauge Repair Kit (G) RKB606X30B
FIll Plug Replacement SAP04113

Specifications

Bowl Capacity –
Aluminum (E) ..... 32 Ounces
Aluminum with Polycarbonate Sight Gauge (G) ..... 64 Ounces
Zinc with Nylon Sight Gauge (W) ..... 16 Ounces

Port Threads ..... 1-1/4, 1-1/2 Inch

Pressure & Temperature Ratings –
Aluminum Bowl (E) ..... 0 to 300 PSIG (0 to 20.4 bar)
40°F to 150°F (4.4°C to 65.6°C)
Aluminum Bowl with
Polycarbonate Sight Gauge (G) ..... 0 to 150 PSIG (0 to 10.2 bar)
40°F to 125°F (4.4°C to 52°C)
Zinc Bowl with
Nylon Sight Gauge (W) ..... 0 to 250 PSIG (0 to 17.2 bar)
40°F to 150°F (4.4°C to 65.6°C)

Suggested Lubricant ..... F442 Oil

Petroleum based oil of 100 to 200 SSU viscosity at 100°F and an aniline point greater than 200°F.

(DO NOT USE OILS WITH ADDITIVES, COMPOUNDED OILS CONTAINING SOLVENTS, GRAPHITE, DETERGENTS, OR SYNTHETIC OILS.)

Weight –
Aluminum Bowl (E) ..... 8.3 lb. (3.76 kg) / Unit
33.2 lb. (15.06 kg) / 4-Unit Master Pack
Aluminum Bowl with
Polycarbonate Sight Gauge (G) ..... 10 lb. (4.54 kg) / Unit
40 lb. (18.14 kg) / 4-Unit Master Pack
Zinc Bowl with
Nylon Sight Gauge (W) ..... 7.5 lb. (3.40 kg) / Unit
28.2 lb. (12.79 kg) / 4-Unit Master Pack

Materials of Construction

Body ..... Zinc

Bowls – (E) ..... Aluminum
(G) ..... Aluminum with Polycarbonate Sight Gauge
(W) ..... Zinc with Nylon Sight Gauge

Seals ..... Buna N

Parker Hannifin Corporation
Pneumatic Division
Richland, Michigan
www.wattsfluidair.com

09L Mist Lubricators – Hi-Flow

Features

- Metal bowl with sight gauge and manual drain – standard
- Transparent sight dome for 360° visibility
- Bowl can be filled while air line is under pressure
- Proportional oil delivery over a wide range of air flows
- High flow: 1000 – SCFM§

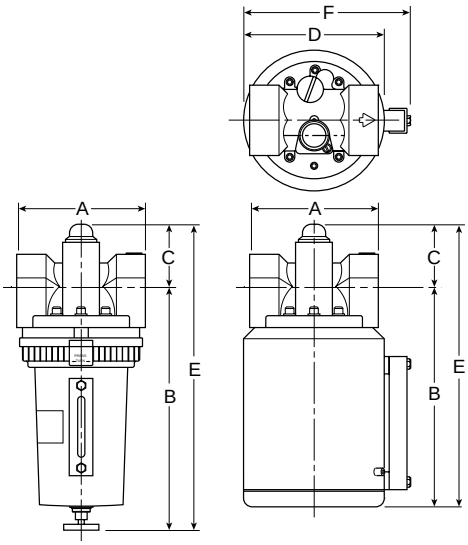

1 Qt. **3 Qt.**

Port Size	NPT
Metal Bowl / Sight Gauge – 1 Quart	
2"	**09L84BA**
Metal Bowl / Sight Gauge – 3 Quart	
2"	**09L8PBA**

Standard part numbers shown bold.
For other models refer to ordering information below.

§ SCFM = Standard Cubic Feet Per Minute at 900 PSIG Inlet, and 5 PSIG Pressure Drop.

09L Lubricator Dimensions						
1 Qt.	**A** 5.50 (140)	**B** 10.40 (264)	**C** 2.64 (67)	**D** —	**E** 13.04 (331)	**F** —
3 Qt.	**A** 5.50 (140)	**B** 9.44 (240)	**C** 2.64 (67)	**D** 6.00 (152)	**E** 12.08 (307)	**E** 7.12 (181)

Inches (mm)

Ordering Information

09L	8	4	B	*	

Port Size
- **8 2 Inch**

Bowl Options
- **Metal Bowl**
- **4 1 Quart Sight Gauge / Manual Drain**
- P 3 Quart Sight Gauge / Manual Drain

Options
- **B Without Tamperproof Cap**

Engineering Level
- * Will be Entered at Factory

Port Type
- **Blank NPT**

BOLD ITEMS ARE MOST POPULAR.

Parker Hannifin Corporation
Pneumatic Division
Richland, Michigan
www.wattsfluidair.com

Technical Information

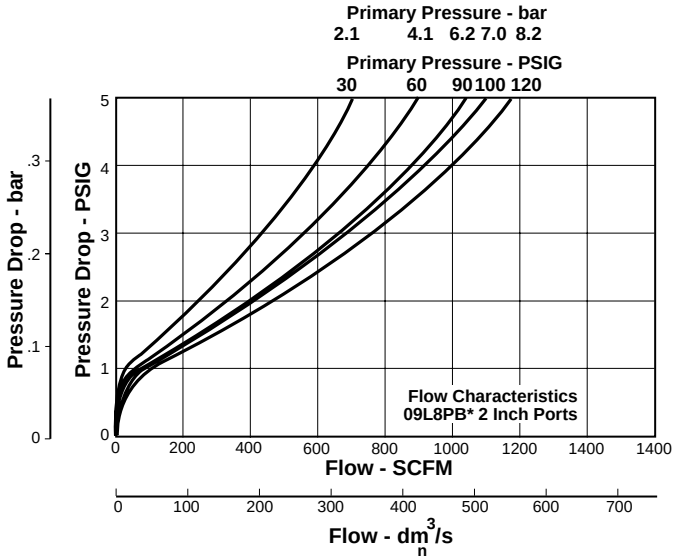

09L Lubricator Kits & Accessories

Fill Cap Kit PS610

Lubricator Service Kit PS607

Metal Bowl – Sight Gauge / Twist Drain PS612*

Oil – 1 Gal. F442002
12 Quart Case F442003
4 Gallon Case F442005

Sight Dome Kit PS613

* 1 Quart Bowl

Specifications

Bowl Capacity ..... 1 Qt. (Standard)
3 Qt. (Optional)

Bowl ..... Metal with Sight Gauge

Drain ..... Manual Twist Drain

Port Threads ..... 2 Inch

Pressure & Temperature Rating ..... 0 to 150 PSIG (0 to 10.3 bar)
32°F to 150°F (0°C to 66°C)

Suggested Lubricant ..... F442 Oil

Petroleum based oil of 100 to 200 SSU viscosity
at 100°F and an aniline point greater than 200°F

(DO NOT USE OILS WITH ADDITIVES,
COMPOUNDED OILS CONTAINING SOLVENTS,
GRAPHITE, DETERGENTS, OR SYNTHETIC OILS.)

Weight – 1 Qt. ..... 10.2 lb. (4.6 kg)
3 Qt. ..... 13.7 lb. (6.2 kg)

Materials of Construction

Body ..... Zinc Alloy, Die Cast

Parker Hannifin Corporation
Pneumatic Division
Richland, Michigan
www.wattsfluidair.com

Close Nippled Combinations – 14 Miniature Series

- See individual component pages for details.

Two-Unit Combo

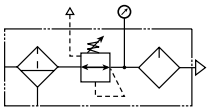

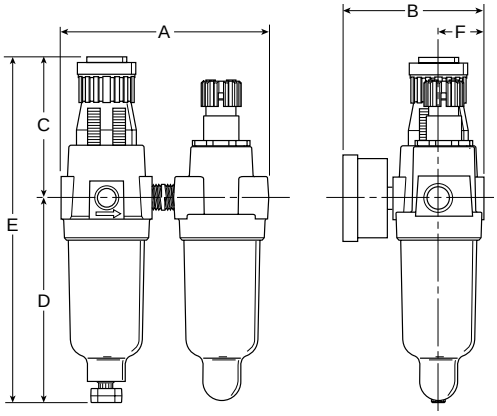

Series	Port	Model Numbers
14G	1/8"	**14G01B13F0G***
	1/4"	**14G11B13F0G***

For other models, refer to ordering information on next page.
For polycarbonate bowl see Caution on inside cover.

A	B	C	D	E	F
3.75 (95)	3.79 (96)	2.42 (61)	2.04 (52)	6.21 (158)	.79 (20)

Inches (mm)
Note: All dimensions nominal.

Three-Unit Combo

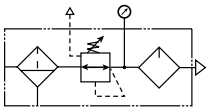

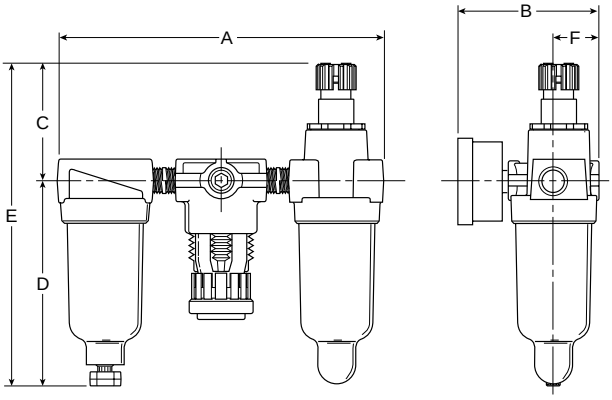

Series	Port	Model Numbers
14A	1/8"	**14A01B13F0G***
	1/4"	**14A11B13F0G***

For other models, refer to ordering information on next page.
For polycarbonate bowl see Caution on inside cover.

A	B	C	D	E	F
5.77 (147)	3.82 (97)	2.16 (55)	2.04 (52)	5.98 (152)	.79 (20)

Inches (mm)
Note: All dimensions nominal.

BOLD ITEMS ARE MOST POPULAR.

Parker Hannifin Corporation
Pneumatic Division
Richland, Michigan
www.wattsfluidair.com

Close Nippled Combinations – 14 Miniature Series

Ordering Information

14A	1	1	B	13	F	0	G	*

Combo Type
- **14A 3-Unit**
- **14G 2-Unit**

Port Size
- **0 1/8"**
- **1 1/4"**

Filter Bowl Options
- Poly Bowl
- **1 Manual Twist Drain**
- 5 Automatic Pulse Drain
- Metal Bowl
- 3 Manual Twist Drain
- 7 Automatic Pulse Drain

Filter Element
- A 40 Micron
- **B 5 Micron**

Regulator Pressure
- Without Gauge
- 10 30 PSIG
- 11 60 PSIG
- 12 15 PSIG
- **13 125 PSIG**
- With Gauge
- 15 30 PSIG
- 16 60 PSIG
- 17 15 PSIG
- 18 125 PSIG

Relief
- **F Relieving**
- G Non-Relieving

Lubricator Bowl Options
- Poly Bowl
- **0 No Drain**
- 1 Manual Twist Drain
- Metal Bowl
- 3 Manual Twist Drain

Lubricator Body Options
- **G No Fill Plug**

Engineering Change Designator
- Will be entered at factory.

⚠ WARNING

Product rupture can cause serious injury.
Do not connect regulator to bottled gas.
Do not exceed maximum primary pressure rating.

⚠ CAUTION:

REGULATOR PRESSURE ADJUSTMENT – The working range of knob adjustment is designed to permit outlet pressures within their full range. Pressure adjustment beyond this range is also possible because the knob is not a limiting device. This is a common characteristic of most industrial regulators, and limiting devices may be obtained only by special design.
For best performance, regulated pressure should always be set by increasing the pressure up to the desired setting.

Mounting Bracket Kits

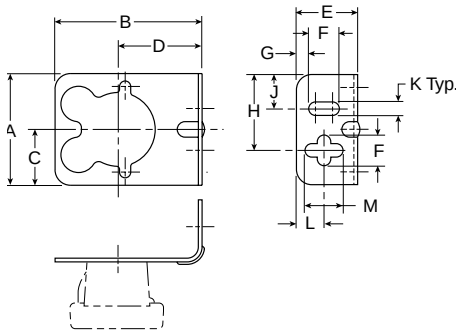

PS417B
(Includes Panel Mount Nut)

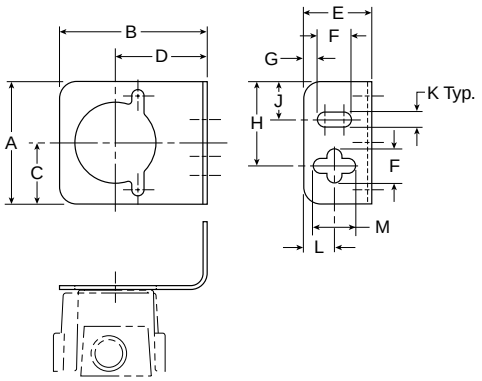

PS419

Dimensions

A	B	C	D	E	F	G	H	J	K	L	M	Kit
1.80 (46)	2.37 (60)	.90 (23)	1.35 (34)	1.00 (25)	.50 (13)	.20 (5)	1.24 (31)	.56 (14)	.22 (6)	.45 (11)	.62 (16)	**PS417B** (14F, 10F, 14R, 14E)
1.80 (46)	2.17 (55)	.90 (23)	1.35 (34)	1.00 (25)	.50 (13)	.20 (5)	1.24 (31)	.56 (14)	.22 (6)	.45 (11)	.62 (16)	**PS419** (04L)

Inches (mm)
Note: All dimensions nominal.

Parker Hannifin Corporation
Pneumatic Division
Richland, Michigan
www.wattsfluidair.com

Close Nippled Combinations – C528 Miniature Series

- See individual component pages for details.

Two-Unit Combo

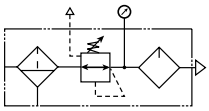

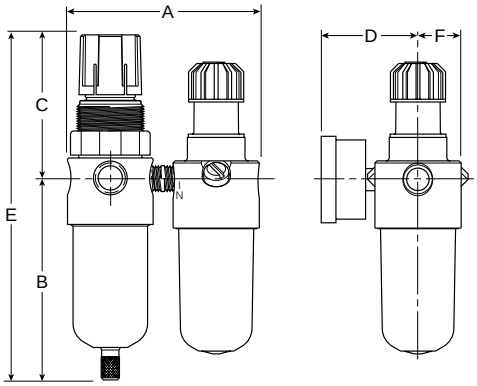

Series	Port	Model Numbers
C528BL	1/8", 1/4"	**C528**BLAHCA**
	1/8", 1/4"	**C528**BLDHCD**

**** Port Size 01 = 1/8", 02 = 1/4".**
For other models, refer to ordering information on next page.
For polycarbonate bowl see Caution on inside cover.

A	B	C	D	E	F
3.50 (89)	3.50 (89)	2.38 (60)	1.98 (50)	5.88 (149)	.77 (20)

Inches (mm)
Note: All dimensions nominal.

Three-Unit Combo

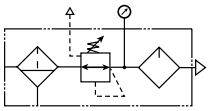

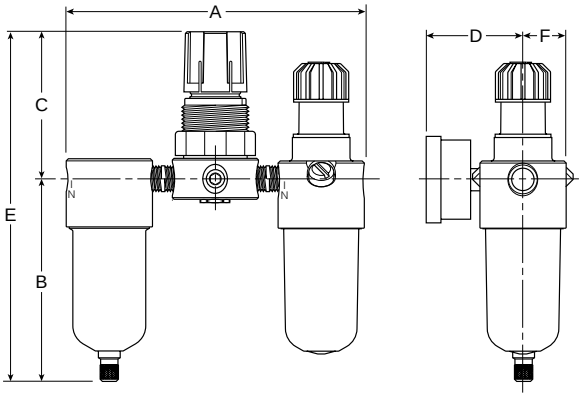

Series	Port	Model Numbers
C528FRL	1/8", 1/4"	**C528**FRLAHCA**
	1/8", 1/4"	**C528**FRLDHCD**

**** Port Size 01 = 1/8", 02 = 1/4".**
For other models, refer to ordering information on next page.
For polycarbonate bowl see Caution on inside cover.

A	B	C	D	E	F
5.13 (130)	3.50 (89)	1.63 (41)	1.98 (50)	5.13 (130)	.77 (20)

Inches (mm)
Note: All dimensions nominal.

BOLD ITEMS ARE MOST POPULAR.

Parker Hannifin Corporation
Pneumatic Division
Richland, Michigan
www.wattsfluidair.com

Close Nippled Combinations – C528 Miniature Series

Ordering Information

C528	01	BL	A	H	C	A

Port Size
- 01 1/8"
- 02 1/4"

Combo Type
- BL 2-Unit
- FRL 3-Unit

Filter Bowl Options
- A Polycarbonate
- D Zinc

Filter Element
- G 5 Micron
- H 20 Micron

Reduced Pressure Range
- A 0 - 25 PSIG
- B 0 - 60 PSIG
- C 0 - 125 PSIG

Lubricator Bowl Options
- A Polycarbonate
- D Zinc

⚠ WARNING

Product rupture can cause serious injury.
Do not connect regulator to bottled gas.
Do not exceed maximum primary pressure rating.

⚠ CAUTION:

REGULATOR PRESSURE ADJUSTMENT – The working range of knob adjustment is designed to permit outlet pressures within their full range. Pressure adjustment beyond this range is also possible because the knob is not a limiting device. This is a common characteristic of most industrial regulators, and limiting devices may be obtained only by special design.
For best performance, regulated pressure should always be set by increasing the pressure up to the desired setting.

Mounting Bracket Kit

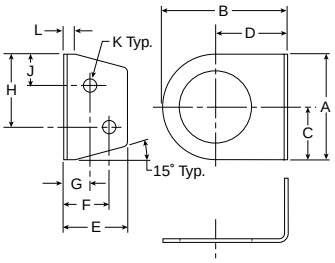

SA161X57
(Comes with R05X51-P Panel Nut)

Dimensions

A	B	C	D	E	F	G	H	J	K	L
1.75 (44)	2.06 (53)	.88 (22)	1.19 (30)	1.06 (27)	.75 (19)	.44 (11)	1.22 (31)	.53 (13)	.22 (6)	.19 (5)

Inches (mm)
Note: All dimensions nominal.

Parker Hannifin Corporation
Pneumatic Division
Richland, Michigan
www.wattsfluidair.com

Close Nippled Combinations – C10 Compact & Standard Series

- See individual component pages for details.

Two-Unit Combo

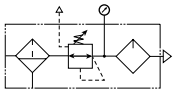

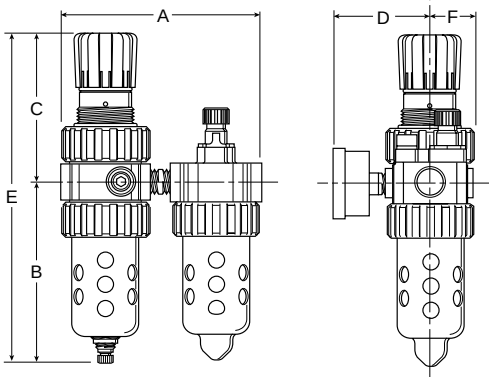

Series	Port Size	Model Numbers
C10	1/4" (Compact)	**C10-02BL2A11A2B***
	3/8" (Compact)	**C10-03BL2A11A2B***
	1/2" (Compact)	**C10-04BL2A11A2B***
	3/4" (Standard)	**C10-06BL2A11A2B***

For other models, refer to ordering information on next page.

C10 2-Unit Combination Dimensions					
A	**B**	**C**	**D**	**E**	**F**
C10-02BL, C10-03BL, C10-04BL Compact					
6.13 (156)	5.69 (145)	4.69 (119)	3.18 (81)	10.38 (264)	1.37 (35)
C10-06BL Standard					
6.99 (178)	6.97 (177)	4.79 (122)	3.44 (87)	11.76 (299)	1.63 (41)

Inches (mm)
- All dimensions nominal.

Three-Unit Combo

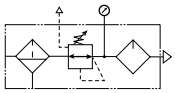

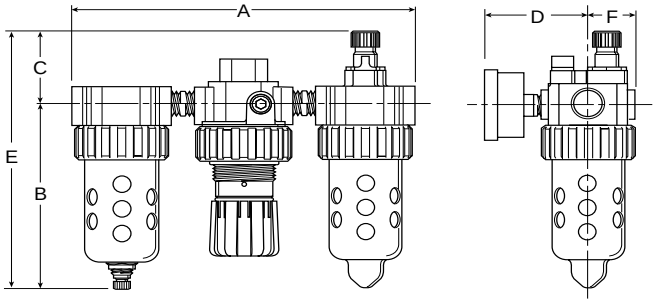

Series	Port Size	Model Numbers
C10	1/4" (Compact)	**C10-02FRL2A11A2B***
	3/8" (Compact)	**C10-03FRL2A11A2B***
	1/2" (Compact)	**C10-04FRL2A11A2B***
	3/4" (Standard)	**C10-06FRL2A11A2B***

For other models, refer to ordering information on next page.

C10 3-Unit Combination Dimensions					
A	**B**	**C**	**D**	**E**	**F**
C10-02FRL, C10-03FRL, C10-04FRL Compact					
9.45 (240)	5.69 (145)	2.24 (57)	3.18 (81)	7.93 (201)	1.37 (35)
C10-06FRL Standard					
10.74 (2738)	6.97 (177)	2.41 (61)	3.44 (87)	9.38 (238)	1.63 (41)

Inches (mm)
- All dimensions nominal.

BOLD ITEMS ARE MOST POPULAR.

Parker Hannifin Corporation
Pneumatic Division
Richland, Michigan
www.wattsfluidair.com

Close Nippled Combinations – C10 Compact & Standard Series

Ordering Information

C10	–	02	FRL	2	A	11	A	2	B	*

Thread
- **– NPT**
- G* BSPP

* 1/4 & 3/8 inch meet ISO 1179-1 Standard.

Port Size
- **02 1/4 Inch**
- **03 3/8 Inch**
- **04 1/2 Inch**
- **06 3/4 Inch**

Combo Type
- **FRL Filter + Regulator + Lubricator (3 piece combination)**
- **BL Filter / Regulator + Lubricator (2 piece combination)**

Filter Bowl & Drain

Poly Bowl
- **2 Metal Bowl Guard / Twist Drain**
- **6 Metal Bowl Guard / Auto Float Drain**

Metal Bowl
- 3 Twist Drain
- **4 Sight Gauge / Twist Drain**
- 7 Auto Float Drain
- **8 Sight Gauge / Auto Float Drain**

Filter Element
- **A 40 Micron**

Pressure Range

Without Gauge
- **11 0-60 PSIG**
- **13 0-125 PSIG**
- 15§ 0-250 PSIG

With Gauge
- **16 0-60 PSIG**
- **18 0-125 PSIG**
- 21§ 0-250 PSIG

§ If 250 psig spring range is used, use metal bowl.

Relief
- **A Relieving**
- L Non- Relieving

Lubricator Bowl & Drain

Poly Bowl
- **2 Metal Bowl Guard / No Drain**
- 6 Metal Bowl Guard / Pressure Fill
- N Metal Bowl Guard / Twist Drain

Metal Bowl
- **4 Twist Drain**
- 8 Pressure Fill

Lubricator Body Options
- **B With Fill Plug**
- F With Body Pressure Fill

Engineering Level
- * Will be Entered at Factory

BOLD ITEMS ARE MOST POPULAR.

⚠ CAUTION:

REGULATOR PRESSURE ADJUSTMENT – The working range of knob adjustment is designed to permit outlet pressures within their full range. Pressure adjustment beyond this range is also possible because the knob is not a limiting device. This is a common characteristic of most industrial regulators, and limiting devices may be obtained only by special design.
For best performance, regulated pressure should always be set by increasing the pressure up to the desired setting.

⚠ WARNING

Product rupture can cause serious injury.
Do not connect regulator to bottled gas.
Do not exceed maximum primary pressure rating.

For polycarbonate bowl and sight dome, see Caution on Inside Cover.

Kits & Accessories

(See individual component sections for other kits and accessories.)

Mounting Bracket Kit (Includes Panel Mount Nut)

1/4", 3/8" , 1/2" PS707
3/4" PS807

Parker Hannifin Corporation
Pneumatic Division
Richland, Michigan
www.wattsfluidair.com

Standard Combinations – C628 Series

Three-Unit Combo

- See individual component pages for details.
- Gauges included on combinations.

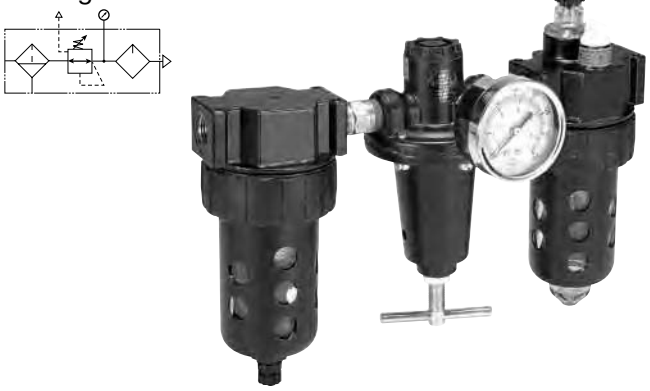

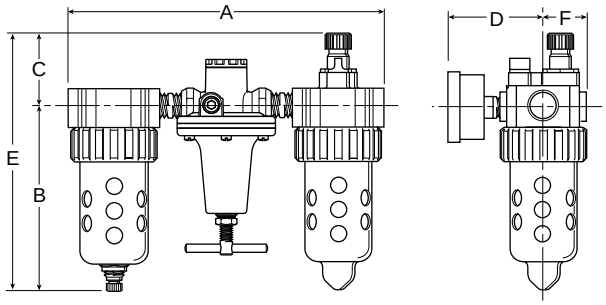

Series	Port Size	Model Numbers
C628	1/4"	**C628-02FRL2ACA2B***
	3/8"	**C628-03FRL2ACA2B***
	1/2"	**C628-04FRL2ACA2B***

For other models, refer to ordering information.

A	B	C	D	E	F
C628-02FRL, C628-03FRL					
9.64 (245)	5.69 (145)	2.24 (57)	3.18 (81)	7.93 (201)	1.37 (35)
C628-04FRL					
10.55 (268)	5.69 (145)	2.24 (57)	3.18 (81)	7.93 (201)	1.37 (35)

Inches (mm)
- All dimensions nominal.

Ordering Information

C628	–	02	FRL	2	A	C	A	2	B	*

Thread
- **– NPT**
- G* BSPP

* 1/4 & 3/8 inch meet ISO 1179-1 Standard.

Port Size
- **02 1/4 Inch**
- **03 3/8 Inch**
- **04 1/2 Inch**

Combo Type
- **FRL Filter + Regulator + Lubricator (3 piece combination)**

Filter Element
- **A 40 Micron**

Pressure Range
- **C 0-125 psig**
- D 0-250 psig

Relief
- **A Relieving**
- L Non-Relieving

Lubricator Body Options
- **B With Fill Plug**
- F With Body Pressure Fill

Engineering Level
- * Will be Entered at Factory

Filter Bowl & Drain

Poly Bowl
- **2 Metal Bowl Guard / Twist Drain**
- **6 Metal Bowl Guard / Auto Float Drain**

Metal Bowl
- 3 Twist Drain
- **4 Sight Gauge / Twist Drain**
- 7 Auto Float Drain
- **8 Sight Gauge / Auto Float Drain**

Lubricator Bowl & Drain

Poly Bowl
- **2 Metal Bowl Guard / No Drain**
- 6 Metal Bowl Guard / Pressure Fill
- N Metal Bowl Guard / Twist Drain

Metal Bowl
- **4 Twist Drain**
- 8 Pressure Fill

⚠ WARNING

Product rupture can cause serious injury.
Do not connect regulator to bottled gas.
Do not exceed maximum primary pressure rating.

⚠ CAUTION:

REGULATOR PRESSURE ADJUSTMENT – The working range of knob adjustment is designed to permit outlet pressures within their full range. Pressure adjustment beyond this range is also possible because the knob is not a limiting device. This is a common characteristic of most industrial regulators, and limiting devices may be obtained only by special design.
For best performance, regulated pressure should always be set by increasing the pressure up to the desired setting.

BOLD ITEMS ARE MOST POPULAR.

For polycarbonate bowl and sight dome, see Caution on Inside Cover.

Parker Hannifin Corporation
Pneumatic Division
Richland, Michigan
www.wattsfluidair.com

Standard Combinations – C628 Series

Three-Unit Combo

- See individual component pages for details.
- Gauges included on combinations.

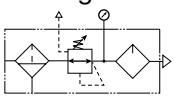

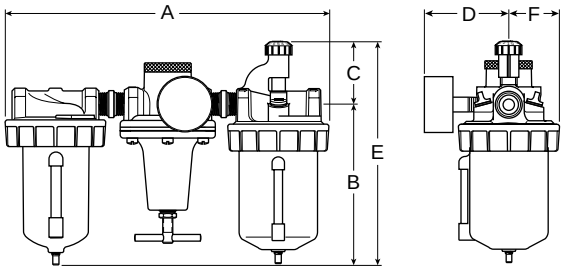

Series	Port Size	Model Numbers
C628	3/4"	**C628-06FRLWJCW**
	1"	**C628-08FRLWJCW**
	1-1/4"	**C628-10FRLWJCW**
	1-1/2"	**C628-12FRLWJCW**

For other models, refer to ordering information below.

A	B	C	D	E	F
C628-06FRL, C628-08FRL					
15.75 (400)	7.75 (197)	2.63 (67)	3.52 (89)	13.00 (330)	2.48 (63)
C628-10FRL, C628-12FRL					
16.50 (419)	8.13 (206)	2.84 (72)	3.86 (98)	14.13 (359)	2.64 (67)

Inches (mm)

- All dimensions nominal.

Ordering Information

C628	–	06	FRL	W	J	C	W	

Thread
- **– NPT**

Port Size
- **06 3/4 Inch**
- **08 1 Inch**
- **10 1-1/4 Inch**
- **12 1-1/2 Inch**

Combo Type
- **FRL Filter + Regulator + Lubricator (3 piece combination)**

Filter Element
- **J 40 Micron**

Filter Bowl Options
- E 32 oz. Large Capacity wo/ Sight Gauge
- **W 16 oz. Metal w/Sight Gauge**

Pressure Range
- **C 0-125 psig**
- D 0-250 psig

Drains and Options
- H Button Head Fill Fitting (Lubricator)
- K Non-Relieving Regulator
- Q External Heavy Duty Auto Drain (Filter)
- R Internal Auto Drain (Filter)
- X9 Manual Twist Drain on Lubricator (Increases Product Length by 9/16 Inch)

Lubricator Bowl Options
- E 32 oz. Large Capacity wo/ Sight Gauge
- **W 16 oz. Metal w/Sight Gauge**

⚠ CAUTION:

REGULATOR PRESSURE ADJUSTMENT – The working range of knob adjustment is designed to permit outlet pressures within their full range. Pressure adjustment beyond this range is also possible because the knob is not a limiting device. This is a common characteristic of most industrial regulators, and limiting devices may be obtained only by special design.
For best performance, regulated pressure should always be set by increasing the pressure up to the desired setting.

⚠ WARNING

Product rupture can cause serious injury.
Do not connect regulator to bottled gas.
Do not exceed maximum primary pressure rating.

BOLD ITEMS ARE MOST POPULAR.

Parker Hannifin Corporation
Pneumatic Division
Richland, Michigan
www.wattsfluidair.com

Notes

Parker Hannifin Corporation
Pneumatic Division
Richland, Michigan
www.wattsfluidair.com

Notes

Parker Hannifin Corporation
Pneumatic Division
Richland, Michigan
www.wattsfluidair.com

Safety Guide For Selecting And Using Pneumatic Division Products And Related Accessories

⚠ WARNING:

FAILURE OR IMPROPER SELECTION OR IMPROPER USE OF PNEUMATIC DIVISION PRODUCTS, ASSEMBLIES OR RELATED ITEMS ("PRODUCTS") CAN CAUSE DEATH, PERSONAL INJURY, AND PROPERTY DAMAGE. POSSIBLE CONSEQUENCES OF FAILURE OR IMPROPER SELECTION OR IMPROPER USE OF THESE PRODUCTS INCLUDE BUT ARE NOT LIMITED TO:

- Unintended or mistimed cycling or motion of machine members or failure to cycle
- Work pieces or component parts being thrown off at high speeds.
- Failure of a device to function properly for example, failure to clamp or unclamp an associated item or device.
- Explosion
- Suddenly moving or falling objects.
- Release of toxic or otherwise injurious liquids or gasses.

Before selecting or using any of these Products, it is important that you read and follow the instructions below.

1. GENERAL INSTRUCTIONS

1.1. Scope: This safety guide is designed to cover general guidelines on the installation, use, and maintenance of Pneumatic Division Valves, FRLs (Filters, Pressure Regulators, and Lubricators), Vacuum products and related accessory components.

1.2. Fail-Safe: Valves, FRLs, Vacuum products and their related components can and do fail without warning for many reasons. Design all systems and equipment in a fail-safe mode, so that failure of associated valves, FRLs or Vacuum products will not endanger persons or property.

1.3 Relevant International Standards: For a good guide to the application of a broad spectrum of pneumatic fluid power devices see: ISO 4414:1998, Pneumatic Fluid Power – General Rules Relating to Systems. See www.iso.org for ordering information.

1.4. Distribution: Provide a copy of this safety guide to each person that is responsible for selection, installation, or use of Valves, FRLs or Vacuum products. Do not select, or use Parker valves, FRLs or vacuum products without thoroughly reading and understanding this safety guide as well as the specific Parker publications for the products considered or selected.

1.5. User Responsibility: Due to the wide variety of operating conditions and applications for valves, FRLs, and vacuum products Parker and its distributors do not represent or warrant that any particular valve, FRL or vacuum product is suitable for any specific end use system. This safety guide does not analyze all technical parameters that must be considered in selecting a product. The user, through its own analysis and testing, is solely responsible for:

- Making the final selection of the appropriate valve, FRL, Vacuum component, or accessory.
- Assuring that all user's performance, endurance, maintenance, safety, and warning requirements are met and that the application presents no health or safety hazards.
- Complying with all existing warning labels and / or providing all appropriate health and safety warnings on the equipment on which the valves, FRLs or Vacuum products are used; and,
- Assuring compliance with all applicable government and industry standards.

1.6. Safety Devices: Safety devices should not be removed, or defeated.

1.7. Warning Labels: Warning labels should not be removed, painted over or otherwise obscured.

1.8. Additional Questions: Call the appropriate Parker technical service department if you have any questions or require any additional information. See the Parker publication for the product being considered or used, or call 1-800-CPARKER, or go to www.parker.com, for telephone numbers of the appropriate technical service department.

2. PRODUCT SELECTION INSTRUCTIONS

2.1. Flow Rate: The flow rate requirements of a system are frequently the primary consideration when designing any pneumatic system. System components need to be able to provide adequate flow and pressure for the desired application.

2.2. Pressure Rating: Never exceed the rated pressure of a product. Consult product labeling, Pneumatic Division catalogs or the instruction sheets supplied for maximum pressure ratings.

2.3. Temperature Rating: Never exceed the temperature rating of a product. Excessive heat can shorten the life expectancy of a product and result in complete product failure.

2.4. Environment: Many environmental conditions can affect the integrity and suitability of a product for a given application. Pneumatic Division products are designed for use in general purpose industrial applications. If these products are to be used in unusual circumstances such as direct sunlight and/or corrosive or caustic environments, such use can shorten the useful life and lead to premature failure of a product.

2.5. Lubrication and Compressor Carryover: Some modern synthetic oils can and will attack nitrile seals. If there is any possibility of synthetic oils or greases migrating into the pneumatic components check for compatibility with the seal materials used. Consult the factory or product literature for materials of construction.

2.6. Polycarbonate Bowls and Sight Glasses: To avoid potential polycarbonate bowl failures:

- Do not locate polycarbonate bowls or sight glasses in areas where they could be subject to direct sunlight, impact blow, or temperatures outside of the rated range.
- Do not expose or clean polycarbonate bowls with detergents, chlorinated hydro-carbons, keytones, esters or certain alcohols.
- Do not use polycarbonate bowls or sight glasses in air systems where compressors are lubricated with fire resistant fluids such as phosphate ester and di-ester lubricants.

Parker Hannifin Corporation
Pneumatic Division
Richland, Michigan
www.wattsfluidair.com

2.7. Chemical Compatibility: For more information on plastic component chemical compatibility see Pneumatic Division technical bulletins Tec-3, Tec-4, and Tec-5

2.8. Product Rupture: Product rupture can cause death, serious personal injury, and property damage.
- Do not connect pressure regulators or other Pneumatic Division products to bottled gas cylinders.
- Do not exceed the maximum primary pressure rating of any pressure regulator or any system component.
- Consult product labeling or product literature for pressure rating limitations.

3. PRODUCT ASSEMBLY AND INSTALLATION INSTRUCTIONS

3.1. Component Inspection: Prior to assembly or installation a careful examination of the valves, FRLs or vacuum products must be performed. All components must be checked for correct style, size, and catalog number. DO NOT use any component that displays any signs of nonconformance.

3.2. Installation Instructions: Parker published Installation Instructions must be followed for installation of Parker valves, FRLs and vacuum components. These instructions are provided with every Parker valve or FRL sold, or by calling 1-800-CPARKER, or at www.parker.com.

3.3. Air Supply: The air supply or control medium supplied to Valves, FRLs and Vacuum components must be moisture-free if ambient temperature can drop below freezing

4. VALVE AND FRL MAINTENANCE AND REPLACEMENT INSTRUCTIONS

4.1. Maintenance: Even with proper selection and installation, valve, FRL and vacuum products service life may be significantly reduced without a continuing maintenance program. The severity of the application, risk potential from a component failure, and experience with any known failures in the application or in similar applications should determine the frequency of inspections and the servicing or replacement of Pneumatic Division products so that products are replaced before any failure occurs. A maintenance program must be established and followed by the user and, at minimum, must include instructions 4.2 through 4.10.

4.2. Installation and Service Instructions: Before attempting to service or replace any worn or damaged parts consult the appropriate Service Bulletin for the valve or FRL in question for the appropriate practices to service the unit in question. These Service and Installation Instructions are provided with every Parker valve and FRL sold, or are available by calling 1-800-CPARKER, or by accessing the Parker web site at www.parker.com.

4.3. Lockout / Tagout Procedures: Be sure to follow all required lockout and tagout procedures when servicing equipment. For more information see: OSHA Standard – 29 CFR, Part 1910.147, Appendix A, The Control of Hazardous Energy – (Lockout / Tagout)

4.4. Visual Inspection: Any of the following conditions requires immediate system shut down and replacement of worn or damaged components:
- Air leakage: Look and listen to see if there are any signs of visual damage to any of the components in the system. Leakage is an indication of worn or damaged components.
- Damaged or degraded components: Look to see if there are any visible signs of wear or component degradation.
- Kinked, crushed, or damaged hoses. Kinked hoses can result in restricted air flow and lead to unpredictable system behavior.
- Any observed improper system or component function: Immediately shut down the system and correct malfunction.
- Excessive dirt build-up: Dirt and clutter can mask potentially hazardous situations.

Caution: Leak detection solutions should be rinsed off after use.

4.5. Routine Maintenance Issues:
- Remove excessive dirt, grime and clutter from work areas.
- Make sure all required guards and shields are in place.

4.6. Functional Test: Before initiating automatic operation, operate the system manually to make sure all required functions operate properly and safely.

4.7. Service or Replacement Intervals: It is the user's responsibility to establish appropriate service intervals. Valves, FRLs and vacuum products contain components that age, harden, wear, and otherwise deteriorate over time. Environmental conditions can significantly accelerate this process. Valves, FRLs and vacuum components need to be serviced or replaced on routine intervals. Service intervals need to be established based on:
- Previous performance experiences.
- Government and / or industrial standards.
- When failures could result in unacceptable down time, equipment damage or personal injury risk.

4.8. Servicing or Replacing of any Worn or Damaged Parts: To avoid unpredictable system behavior that can cause death, personal injury and property damage:
- Follow all government, state and local safety and servicing practices prior to service including but not limited to all OSHA Lockout Tagout procedures (OSHA Standard – 29 CFR, Part 1910.147, Appendix A, The Control of Hazardous Energy – Lockout / Tagout).
- Disconnect electrical supply (when necessary) before installation, servicing, or conversion.
- Disconnect air supply and depressurize all air lines connected to system and Pneumatic Division products before installation, service, or conversion.
- Installation, servicing, and / or conversion of these products must be performed by knowledgeable personnel who understand how pneumatic products are to be applied.
- After installation, servicing, or conversions air and electrical supplies (when necessary) should be connected and the product tested for proper function and leakage. If audible leakage is present, or if the product does not operate properly, do not put product or system into use.
- Warnings and specifications on the product should not be covered or painted over. If masking is not possible, contact your local representative for replacement labels.

4.9. Putting Serviced System Back into Operation: Follow the guidelines above and all relevant Installation and Maintenance Instructions supplied with the valve FRL or vacuum component to insure proper function of the system.

Parker Hannifin Corporation
Pneumatic Division
Richland, Michigan
www.wattsfluidair.com

Offer of Sale

The items described in this document and other documents and descriptions provided by Parker Hannifin Corporation, its subsidiaries and its authorized distributors ("Seller") are hereby offered for sale at prices to be established by Seller. This offer and its acceptance by any customer ("Buyer") shall be governed by all of the following Terms and Conditions. Buyer's order for any item described in its document, when communicated to Seller verbally, or in writing, shall constitute acceptance of this offer. All goods or work described will be referred to as "Products".

1. Terms and Conditions. Seller's willingness to offer Products, or accept an order for Products, to or from Buyer is subject to these Terms and Conditions or any newer version of the terms and conditions found on-line at www.parker.com/saleterms/. Seller objects to any contrary or additional terms or conditions of Buyer's order or any other document issued by Buyer.

2. Price Adjustments; Payments. Prices stated on Seller's quote or other documentation offered by Seller are valid for 30 days, and do not include any sales, use, or other taxes unless specifically stated, Unless otherwise specified by Seller, all prices are F.C.A. Seller's facility (INCOTERMS 2010). Payment is subject to credit approval and is due 30 days from the date of invoice or such other term as required by Seller's Credit Department, after which Buyer shall pay interest on any unpaid invoices at the rate of 1.5% per month or the maximum allowable rate under applicable law.

3. Delivery Dates; Title and Risk; Shipment. All delivery dates are approximate and Seller shall not be responsible for any damages resulting from any delay. Regardless of the manner of shipment, title to any products and risk of loss or damage shall pass to Buyer upon placement of the products with the shipment carrier at Seller's facility. Unless otherwise stated, Seller may exercise its judgment in choosing the carrier and means of delivery. No deferment of shipment at Buyers' request beyond the respective dates indicated will be made except on terms that will indemnify, defend and hold Seller harmless against all loss and additional expense. Buyer shall be responsible for any additional shipping charges incurred by Seller due to Buyer's acts or omissions.

4. Warranty. Seller warrants that the Products sold hereunder shall be free from defects in material or workmanship for a period of twelve months from the date of delivery to Buyer or 2,000 hours of normal use, whichever occurs first. The prices charged for Seller's products are based upon the exclusive limited warranty stated above, and upon the following disclaimer: **DISCLAIMER OF WARRANTY: THIS WARRANTY COMPRISES THE SOLE AND ENTIRE WARRANTY PERTAINING TO PRODUCTS PROVIDED HEREUNDER. SELLER DISCLAIMS ALL OTHER WARRANTIES, EXPRESS AND IMPLIED, INCLUDING DESIGN, MERCHANTABILITY AND FITNESS FOR A PARTICULAR PURPOSE.**

5. Claims; Commencement of Actions. Buyer shall promptly inspect all Products upon delivery. No claims for shortages will be allowed unless reported to the Seller within 10 days of delivery. No other claims against Seller will be allowed unless asserted in writing within 30 days after delivery. Buyer shall notify Seller of any alleged breach of warranty within 30 days after the date the defect is or should have been discovered by Buyer. Any action based upon breach of this agreement or upon any other claim arising out of this sale (other than an action by Seller for an amount due on any invoice) must be commenced within 12 months from the date of the breach without regard to the date breach is discovered.

6. LIMITATION OF LIABILITY. UPON NOTIFICATION, SELLER WILL, AT ITS OPTION, REPAIR OR REPLACE A DEFECTIVE PRODUCT, OR REFUND THE PURCHASE PRICE. **IN NO EVENT SHALL SELLER BE LIABLE TO BUYER FOR ANY SPECIAL, INDIRECT, INCIDENTAL OR CONSEQUENTIAL DAMAGES ARISING OUT OF, OR AS THE RESULT OF, THE SALE, DELIVERY, NON-DELIVERY, SERVICING, USE OR LOSS OF USE OF THE PRODUCTS OR ANY PART THEREOF, OR FOR ANY CHARGES OR EXPENSES OF ANY NATURE INCURRED WITHOUT SELLER'S WRITTEN CONSENT, EVEN IF SELLER HAS BEEN NEGLIGENT, WHETHER IN CONTRACT, TORT OR OTHER LEGAL THEORY. IN NO EVENT SHALL SELLER'S LIABILITY UNDER ANY CLAIM MADE BY BUYER EXCEED THE PURCHASE PRICE OF THE PRODUCTS.**

7. User Responsibility. The user, through its own analysis and testing, is solely responsible for making the final selection of the system and Product and assuring that all performance, endurance, maintenance, safety and warning requirements of the application are met. The user must analyze all aspects of the application and follow applicable industry standards and Product information. If Seller provides Product or system options, the user is responsible for determining that such data and specifications are suitable and sufficient for all applications and reasonably foreseeable uses of the Products or systems.

8. Loss to Buyer's Property. Any designs, tools, patterns, materials, drawings, confidential information or equipment furnished by Buyer or any other items which become Buyer's property, may be considered obsolete and may be destroyed by Seller after two consecutive years have elapsed without Buyer ordering the items manufactured using such property. Seller shall not be responsible for any loss or damage to such property while it is in Seller's possession or control.

9. Special Tooling. A tooling charge may be imposed for any special tooling, including without limitation, dies, fixtures, molds and patterns, acquired to manufacture Products. Such special tooling shall be and remain Seller's property notwithstanding payment of any charges by Buyer. In no event will Buyer acquire any interest in apparatus belonging to Seller which is utilized in the manufacture of the Products, even if such apparatus has been specially converted or adapted for such manufacture and notwithstanding any charges paid by Buyer. Unless otherwise agreed, Seller shall have the right to alter, discard or otherwise dispose of any special tooling or other property in its sole discretion at any time.

10. Buyer's Obligation; Rights of Seller. To secure payment of all sums due or otherwise, Seller shall retain a security interest in the goods delivered and this agreement shall be deemed a Security Agreement under the Uniform Commercial Code. Buyer authorizes Seller as its attorney to execute and file on Buyer's behalf all documents Seller deems necessary to perfect its security interest.

11. Improper use and Indemnity. Buyer shall indemnify, defend, and hold Seller harmless from any claim, liability, damages, lawsuits, and costs (including attorney fees), whether for personal injury, property damage, patent, trademark or copyright infringement or any other claim, brought by or incurred by Buyer, Buyer's employees, or any other person, arising out of: (a) improper selection, improper application or other misuse of Products purchased by Buyer from Seller; (b) any act or omission, negligent or otherwise, of Buyer; (c) Seller's use of patterns, plans, drawings, or specifications furnished by Buyer to manufacture Product; or (d) Buyer's failure to comply with these terms and conditions. Seller shall not indemnify Buyer under any circumstance except as otherwise provided.

12. Cancellations and Changes. Orders shall not be subject to cancellation or change by Buyer for any reason, except with Seller's written consent and upon terms that will indemnify, defend and hold Seller harmless against all direct, incidental and consequential loss or damage. Seller may change product features, specifications, designs and availability with notice to Buyer.

13. Limitation on Assignment. Buyer may not assign its rights or obligations under this agreement without the prior written consent of Seller.

14. Force Majeure. Seller does not assume the risk and shall not be liable for delay or failure to perform any of Seller's obligations by reason of circumstances beyond the reasonable control of Seller (hereinafter "Events of Force Majeure") Events of Force Majeure shall include without limitation: accidents, strikes or labor disputes, acts of any government or government agency, acts of nature, delays or failures in delivery from carriers or suppliers, shortages of materials, or any other cause beyond Seller's reasonable control.

15. Waiver and Severability. Failure to enforce any provision of this agreement will not waive that provision nor will any such failure prejudice Seller's right to enforce that provision in the future. Invalidation of any provision of this agreement by legislation or other rule of law shall not invalidate any other provision herein. The remaining provisions of this agreement will remain in full force and effect.

16. Termination. Seller may terminate this agreement for any reason and at any time by giving Buyer thirty (30) days written notice of termination. Seller may immediately terminate this agreement, in writing, if Buyer: (a) commits a breach of any provision of this agreement (b) appointments a trustee, receiver or custodian for all or any part of Buyer's property (c) files a petition for relief in bankruptcy on its own behalf, or by a third party (d) makes an assignment for the benefit of creditors, or (e) the dissolves or liquidates all or a majority of its assets.

17. Governing Law. This agreement and the sale and delivery of all Products hereunder shall be deemed to have taken place in and shall be governed and construed in accordance with the laws of the State of Ohio, as applicable to contracts executed and wholly performed therein and without regard to conflicts of laws principles. Buyer irrevocably agrees and consents to the exclusive jurisdiction and venue of the courts of Cuyahoga County, Ohio with respect to any dispute, controversy or claim arising out of or relating to this agreement.

18. Indemnity for Infringement of Intellectual Property Rights. Seller shall have no liability for infringement of any patents, trademarks, copyrights, trade dress, trade secrets or similar rights except as provided in this Section. Seller will defend and indemnify Buyer against allegations of infringement of U.S. patents, U.S. trademarks, copyrights, trade dress and trade secrets ("Intellectual Property Rights"). Seller will defend at its expense and will pay the cost of any settlement or damages awarded in an action brought against Buyer based on an allegation that a Product sold pursuant to this Agreement infringes the Intellectual Property Rights of a third party. Seller's obligation to defend and indemnify Buyer is contingent on Buyer notifying Seller within ten (10) days after Buyer becomes aware of such allegations of infringement, and Seller having sole control over the defense of any allegations or actions including all negotiations for settlement or compromise. If a Product is subject to a claim that it infringes the Intellectual Property Rights of a third party, Seller may, at its sole expense and option, procure for Buyer the right to continue using the Product, replace or modify the Product so as to make it noninfringing, or offer to accept return of the Product and return the purchase price less a reasonable allowance for depreciation. Notwithstanding the foregoing, Seller shall have no liability for claims of infringement based on information provided by Buyer, or directed to Products delivered hereunder for which the designs are specified in whole or part by Buyer, or infringements resulting from the modification, combination or use in a system of any Product sold hereunder. The foregoing provisions of this Section shall constitute Seller's sole and exclusive liability and Buyer's sole and exclusive remedy for infringement of Intellectual Property Rights.

19. Entire Agreement. This agreement contains the entire agreement between the Buyer and Seller and constitutes the final, complete and exclusive expression of the terms of sale. All prior or contemporaneous written or oral agreements or negotiations with respect to the subject matter are herein merged.

20. Compliance with Law, U. K. Bribery Act and U.S. Foreign Corrupt Practices Act. Buyer agrees to comply with all applicable laws and regulations, including both those of the United Kingdom and the United States of America, and of the country or countries of the Territory in which the Buyer may operate, including without limitation the U. K. Bribery Act, the U.S. Foreign Corrupt Practices Act ("FCPA") and the U.S. Anti-Kickback Act (the "Anti-Kickback Act"), and agrees to indemnify and hold harmless Seller from the consequences of any violation of such provisions by Buyer, its employees or agents. Buyer acknowledges that they are familiar with the provisions of the U. K. Bribery Act, the FCPA and the Anti-Kickback Act, and certifies that Buyer will adhere to the requirements thereof. In particular, Buyer represents and agrees that Buyer shall not make any payment or give anything of value, directly or indirectly to any governmental official, any foreign political party or official thereof, any candidate for foreign political office, or any commercial entity or person, for the purpose of influencing such person to purchase products or otherwise benefit the business of Seller.

02/12

Parker Hannifin Corporation
Pneumatic Division
Richland, Michigan
www.wattsfluidair.com

Catalog 0303 03/2013

Parker Hannifin Corporation
Pneumatic Division
8676 E. M89
P.O. Box 901
Richland, MI 49083 USA
Tel: 269 629 5000
Fax: 269 629 5385

Applications Engineering
Phone: 877 321 4PDN Option #2
E-mail: pdnapps@parker.com
Customer Support
Phone: 877 321 4PDN Option #1
E-mail: pdncustsvc@parker.com
Web site: www.parker.com/watts